WIRING SYSTEM SECTION

WIRING SYSTEM WI

This service manual has been prepared to provide SUBARU service personnel with the necessary information and data for the correct maintenance and repair of SUBARU vehicles.
This manual includes the procedures for maintenance, disassembling, reassembling, inspection and adjustment of components and diagnostics for guidance of experienced mechanics.
Please peruse and utilize this manual fully to ensure complete repair work for satisfying our customers by keeping their vehicle in optimum condition. When replacement of parts during repair work is needed, be sure to use SUBARU genuine parts.

All information, illustration and specifications contained in this manual are based on the latest product information available at the time of publication approval.

FUJI HEAVY INDUSTRIES LTD.

G8050GE7

WIRING SYSTEM

WI

		Page
1.	Basic Diagnostics Procedure	3
2.	Working Precautions	13
3.	Power Supply Routing	14
4.	Ground Distribution	28
5.	Airbag System	40
6.	Air Conditioning System	46
7.	Anti-lock Brake System	50
8.	A/T Control System	58
9.	Audio System	84
10.	Back-up Light System	88
11.	Charging System	89
12.	Clearance Light and Illumination Light System	90
13.	Combination Meter	96
14.	Cruise Control System	98
15.	Door Lock System	104
16.	Engine Electrical System	106
17.	Front Accessory Power Supply System	164
18.	Front Fog Light System	166
19.	Fuel Gauge System	168
20.	Full-Time Dual-Range System	170
21.	Headlight Beam Leveler System	172
22.	Headlight System	174
23.	Headlight Washer System	176
24.	Horn System	177
25.	Immobilizer System	178
26.	In Compartment Light System	186
27.	Keyless Entry System	190
28.	Oil Pressure and Temperature Gauge System	196
29.	Outside Temperature Display System	198
30.	Parking Brake and Brake Fluid Level Warning System	200
31.	Power Window System	202
32.	Radiator Fan System	210
33.	Rear Accessory Power Supply System	211
34.	Rear Differential Oil Temperature Warning System	212
35.	Rear Fog Light System	214
36.	Rear Window Defogger System	216
37.	Remote Controlled Rearview Mirror System	218
38.	Seat Belt Warning System	222
39.	Seat Heater System	224
40.	Starter System	225
41.	Stop Light System	226
42.	Sunroof System	227
43.	Turn Signal Light and Hazard Light System	228
44.	Wiper and Washer System (Front)	232

45. Wiper and Washer System (Rear) 233
46. Wiper Deicer System 234
47. Overall Systems 236
48. Front Wiring Harness 238
49. Bulkhead Wiring Harness (In Engine Room) 242
50. Bulkhead Wiring Harness (In Compartment) 254
51. Engine Wiring Harness and Transmission Cord 260
52. Instrument Panel Wiring Harness 266
53. Rear Wiring Harness 270
54. Door Cord 274
55. Rear Gate Cord 278

21. Headlight Beam Leveler System S903493

A: SCHEMATIC S903493A21

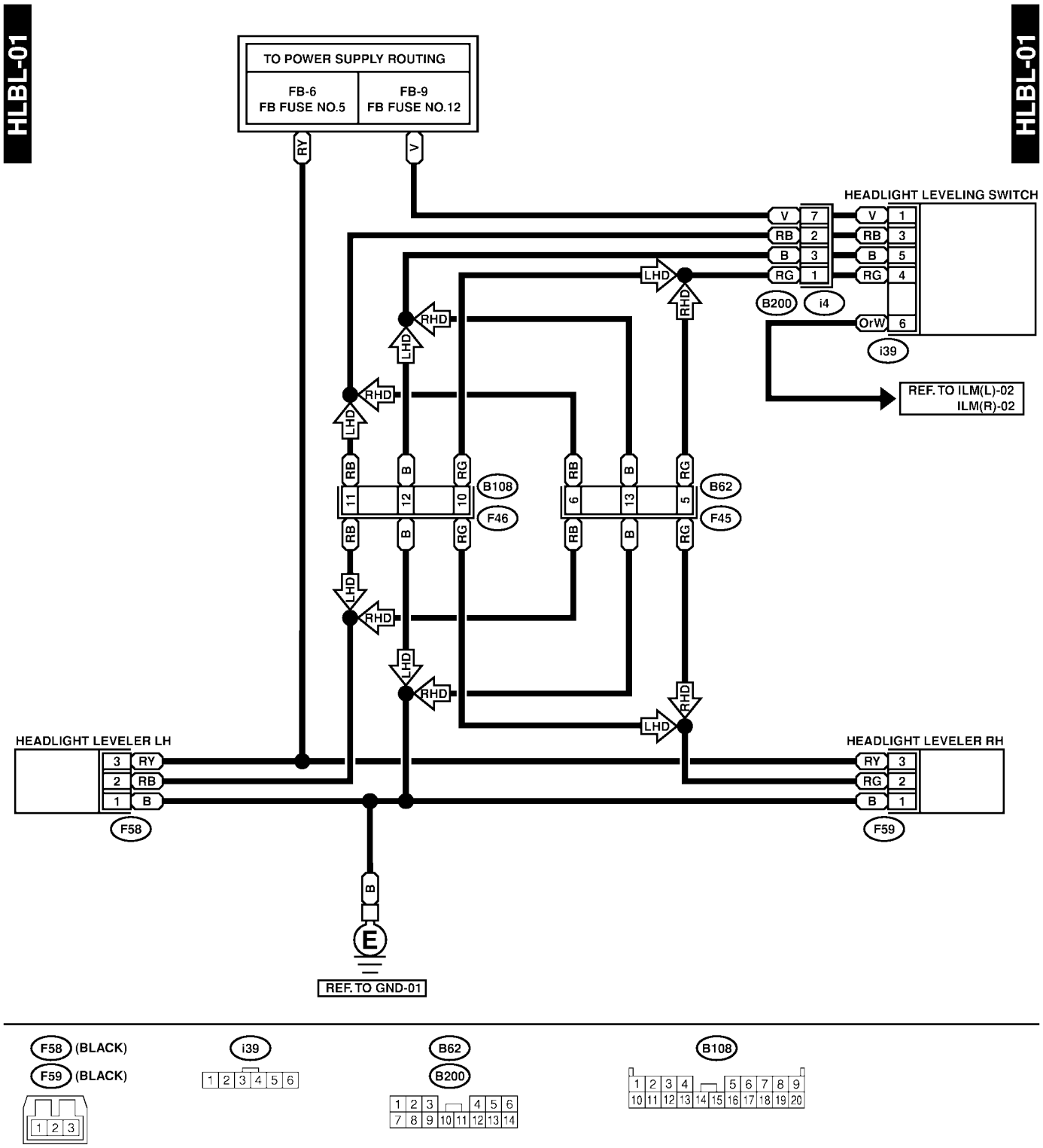

SG83-20

MEMO:

22. Headlight System S903474

A: SCHEMATIC S903474A21

1. LHD MODEL S903474A2101

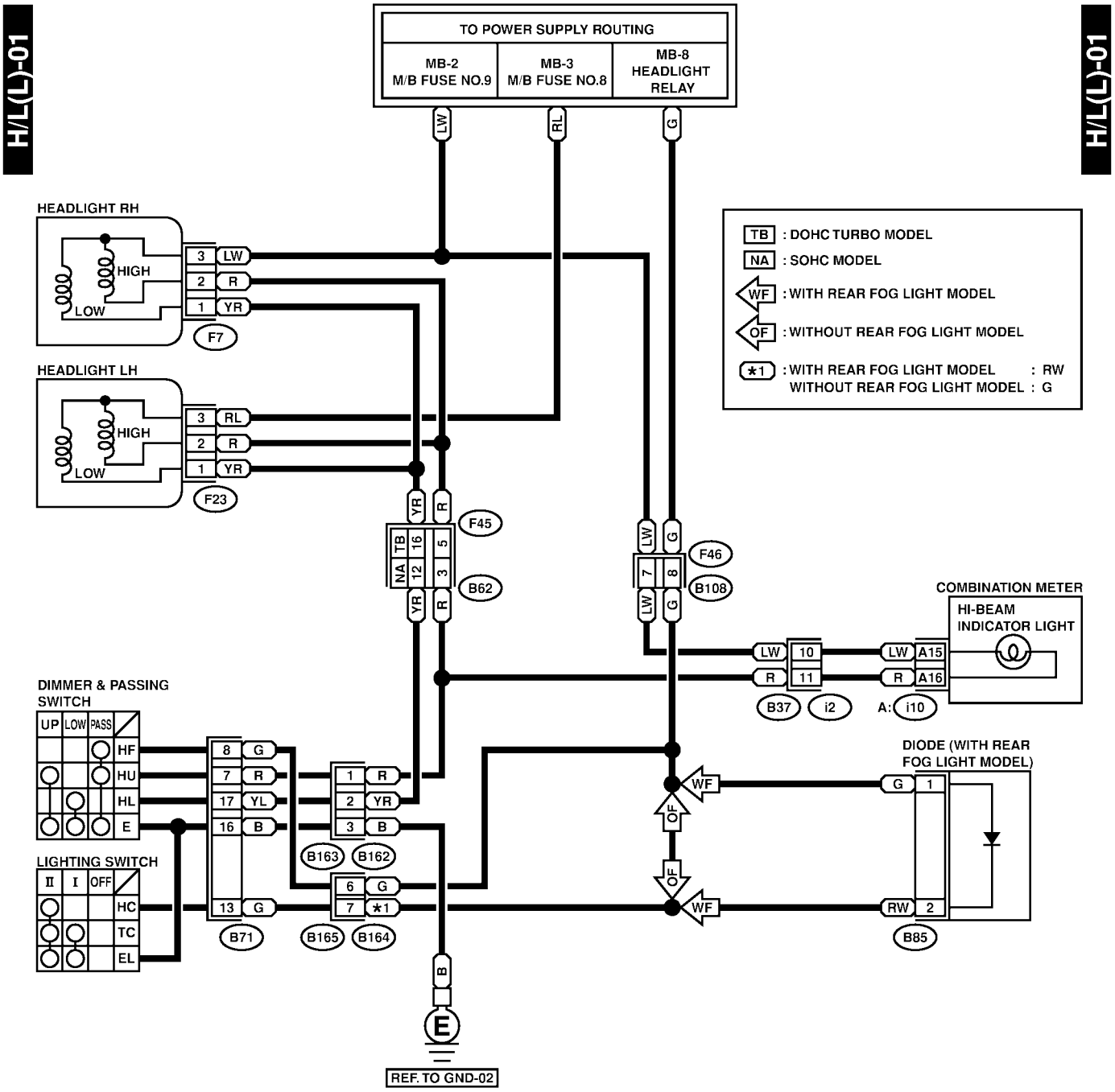

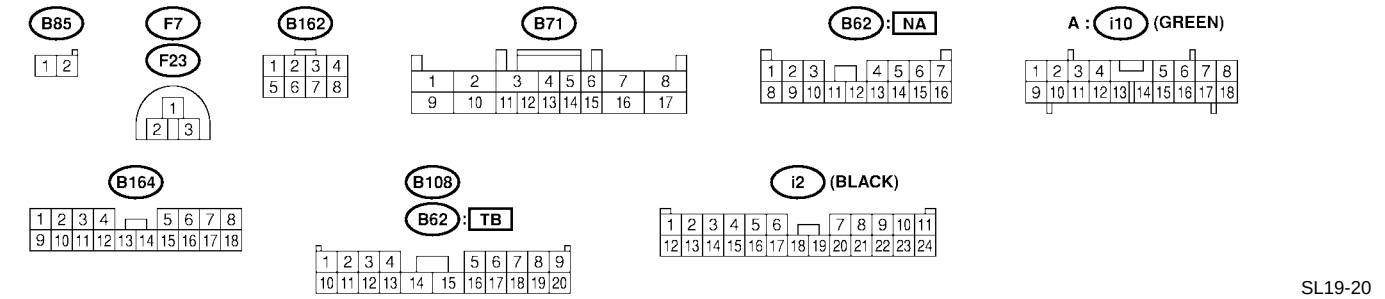

SL19-20

2. RHD MODEL S903474A2102

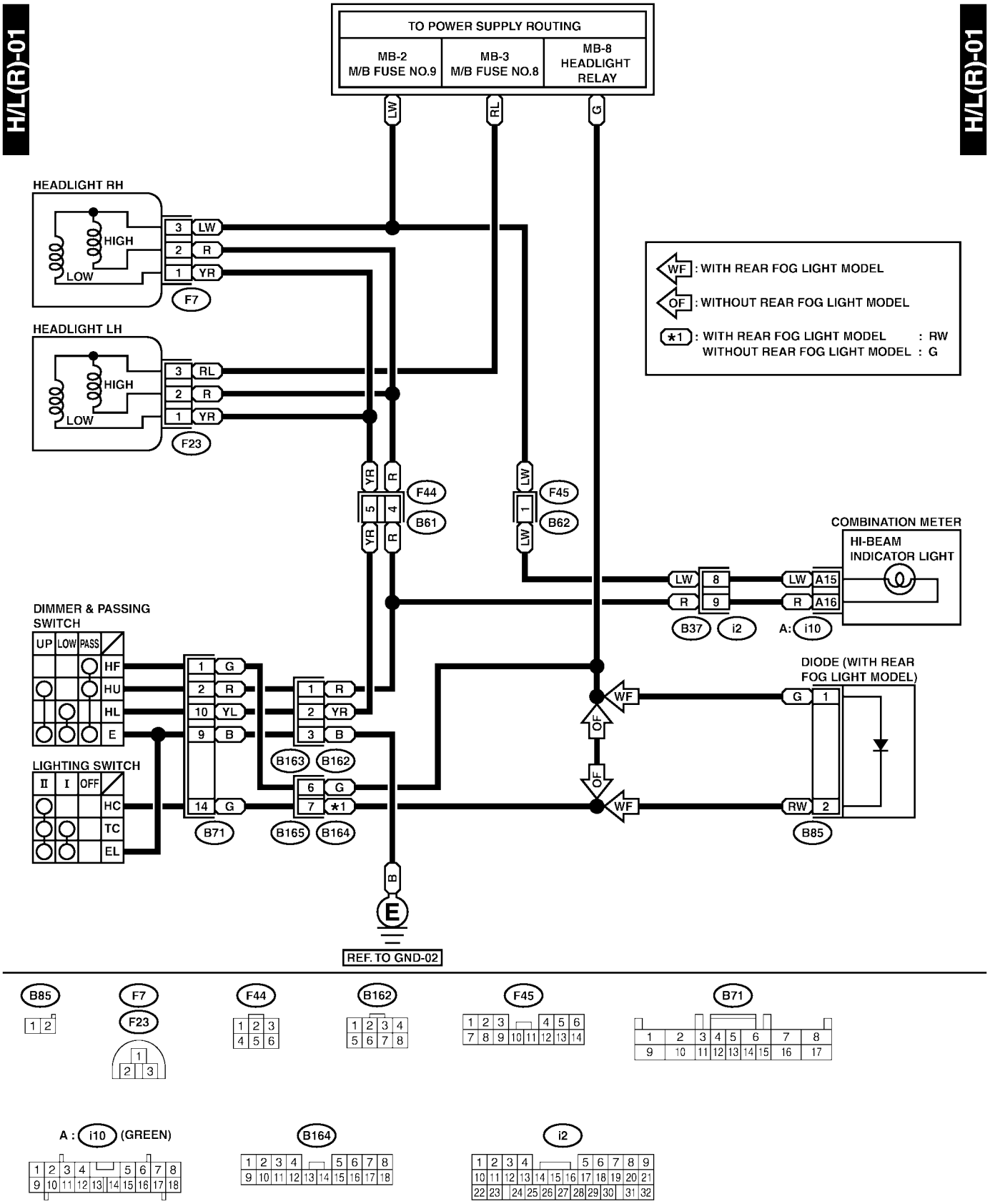

23. Headlight Washer System S903746

A: SCHEMATIC S903746A21

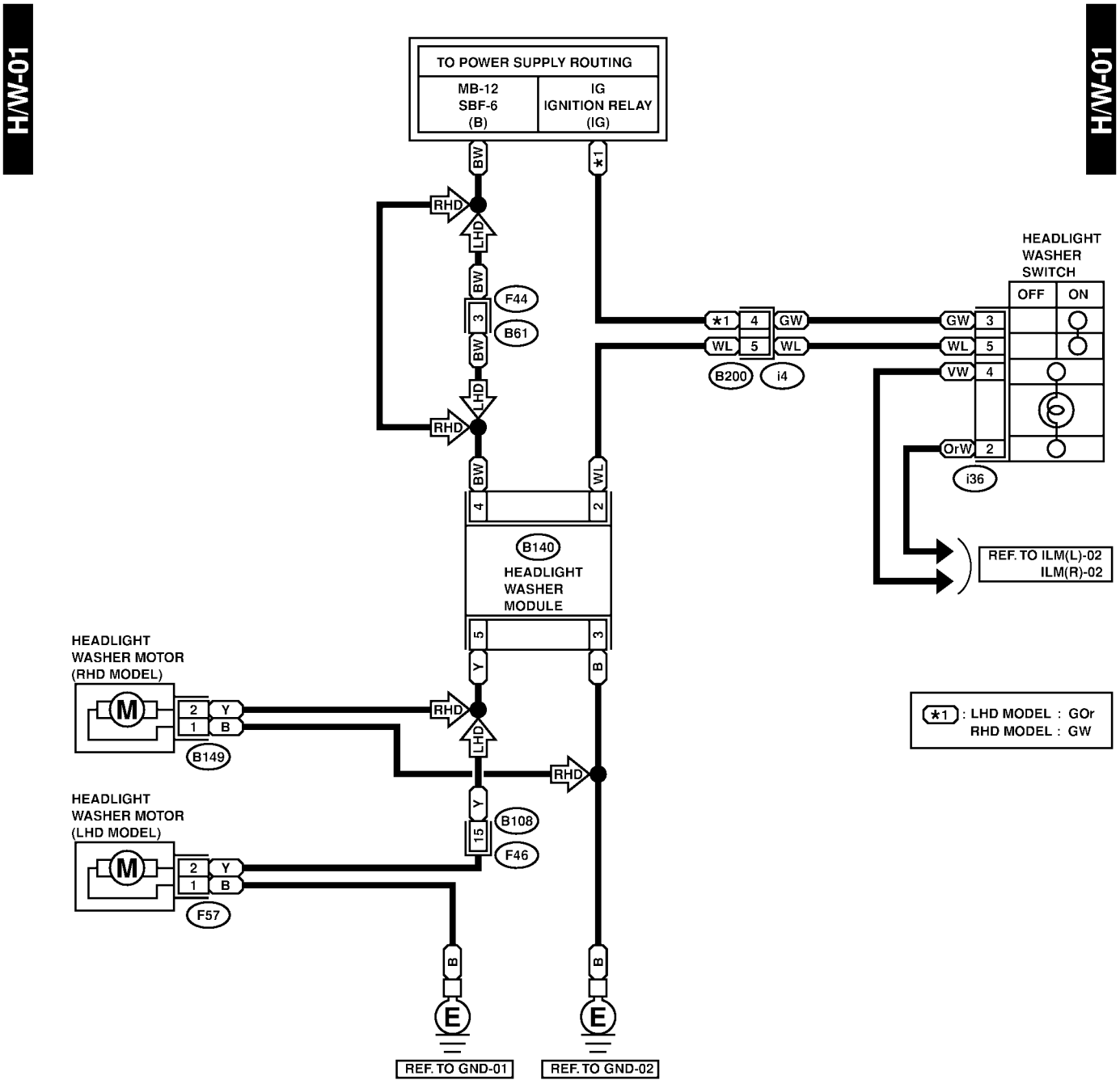

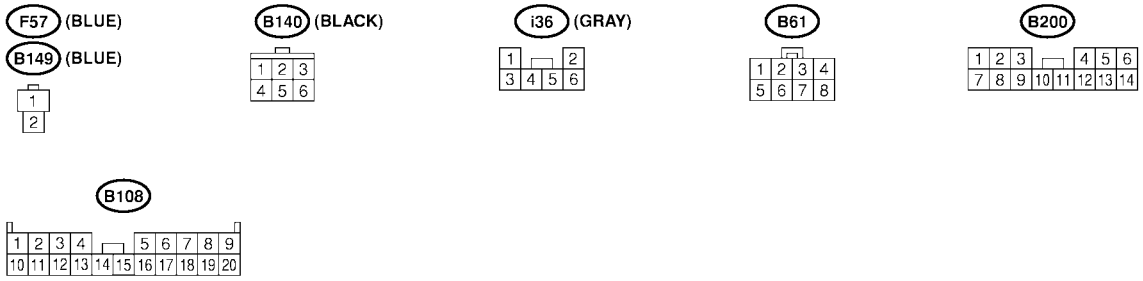

SG53-20

24. Horn System S903436

A: SCHEMATIC S903436A21

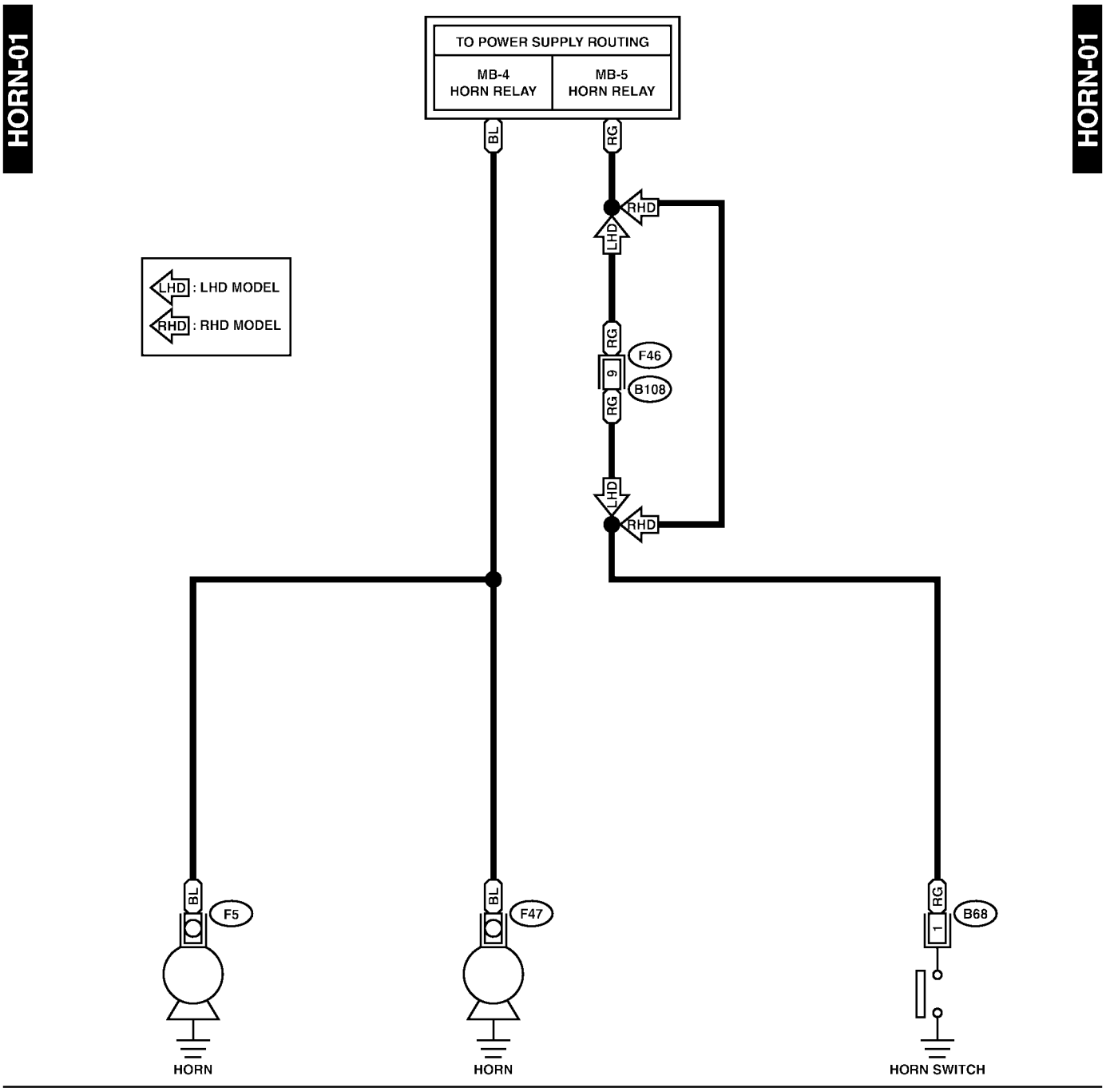

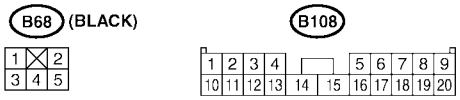

SG74-20

25. Immobilizer System S903346

A: SCHEMATIC S903346A21

1. LHD MODEL WITH OBD S903346A2103

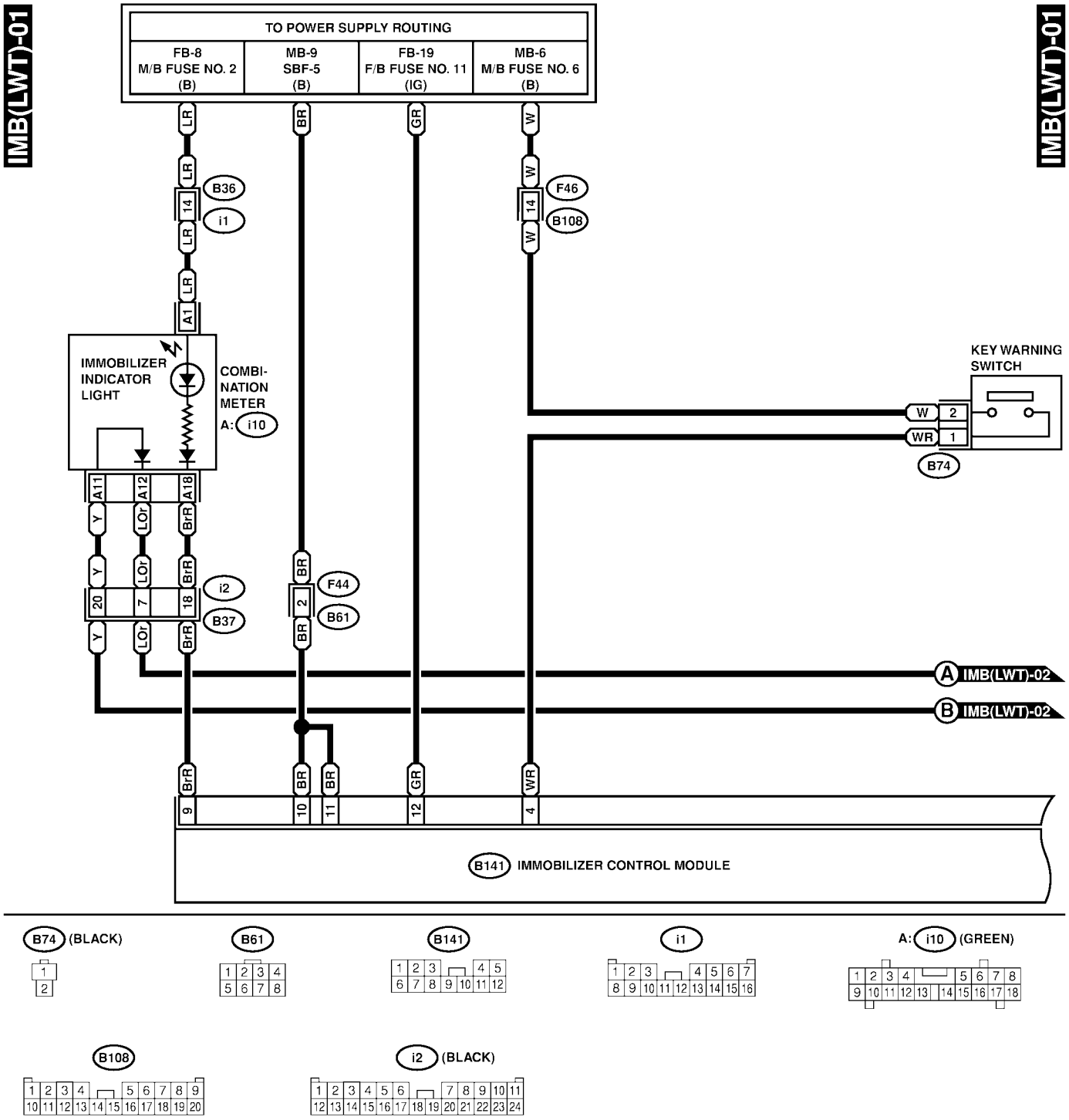

SL91-20A

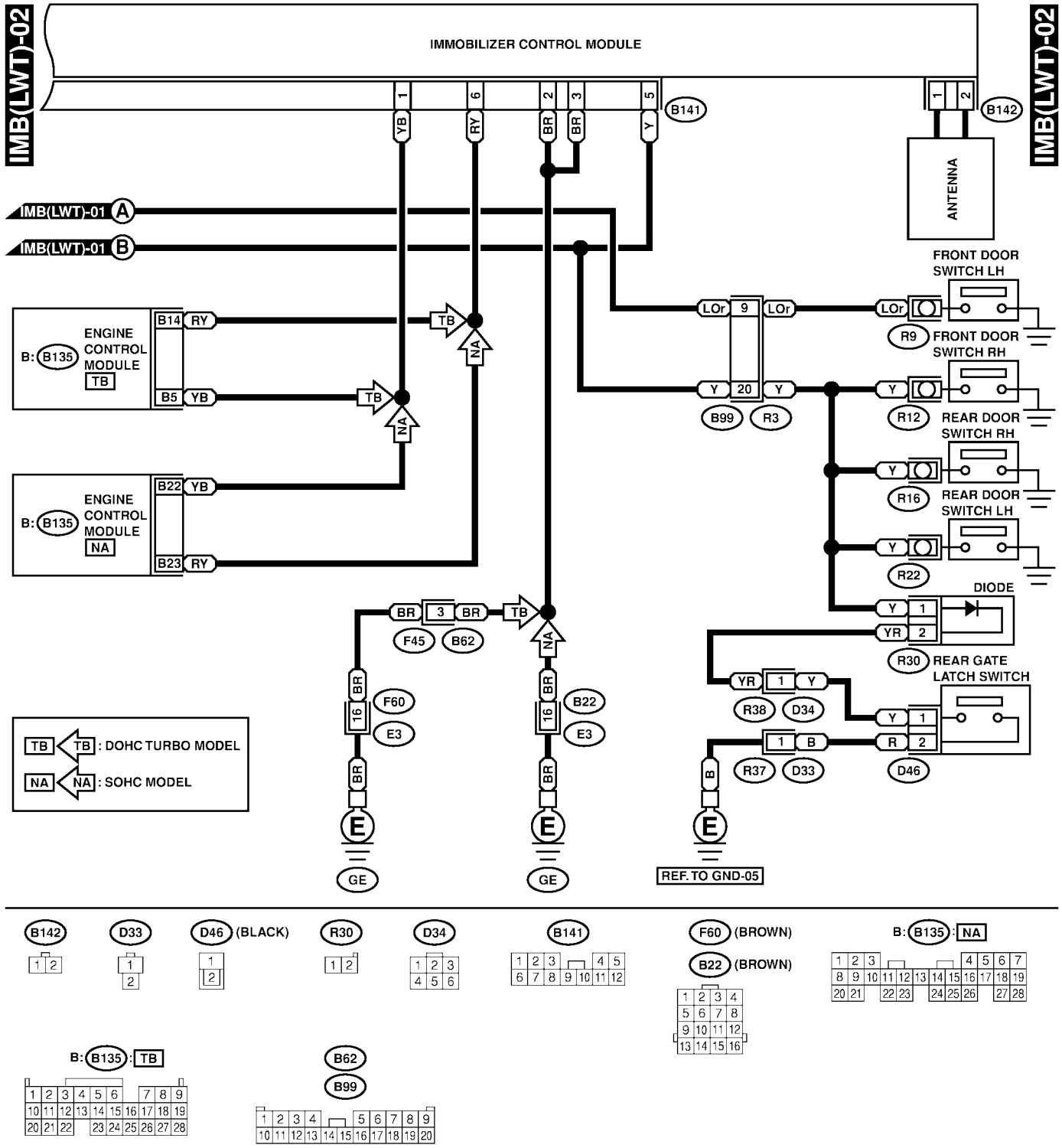
IMB(LWT)-02
IMMOBILIZER CONTROL MODULE
IMB(LWT)-02
B141
B142
ANTENNA
IMB(LWT)-01 A
IMB(LWT)-01 B
FRONT DOOR SWITCH LH
R9
FRONT DOOR SWITCH RH
R12
REAR DOOR SWITCH RH
R16
REAR DOOR SWITCH LH
R22
DIODE
R30
REAR GATE LATCH SWITCH
D46
B: B135
ENGINE CONTROL MODULE
TB
NA
B99
R3
F45
B62
F60
E3
B22
R38
D34
R37
D33
GE
REF. TO GND-05
TB : DOHC TURBO MODEL
NA : SOHC MODEL

B142
D33
D46 (BLACK)
R30
D34
B141
F60 (BROWN)
B22 (BROWN)
B: B135 : NA
B: B135 : TB
B62
B99

SL91-20B

2. LHD NON-TURBO MODEL WITHOUT OBD S903346A2104

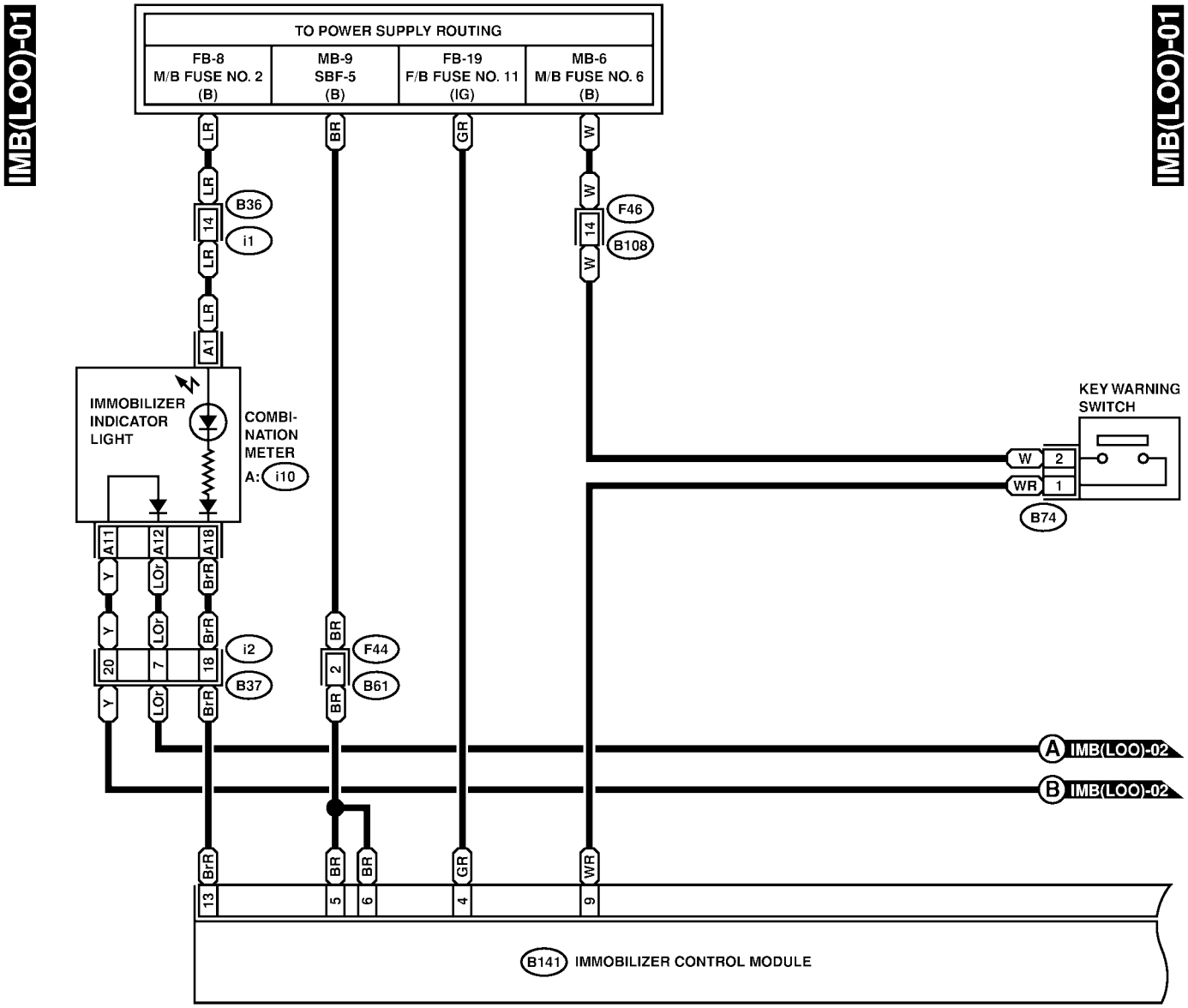

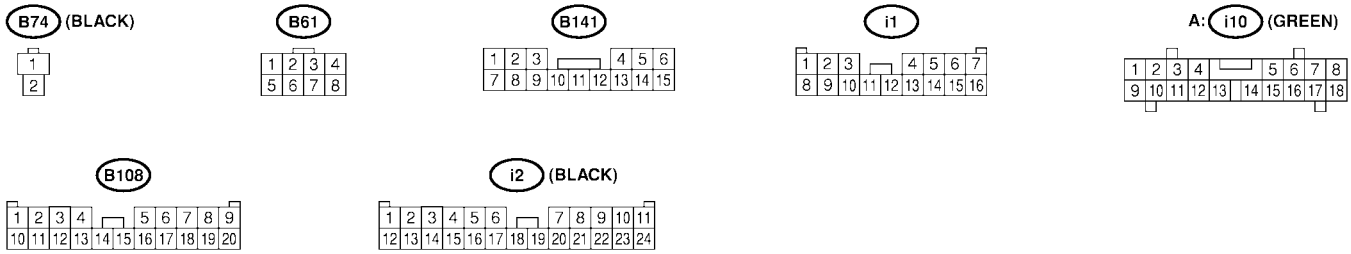

SL91-21A

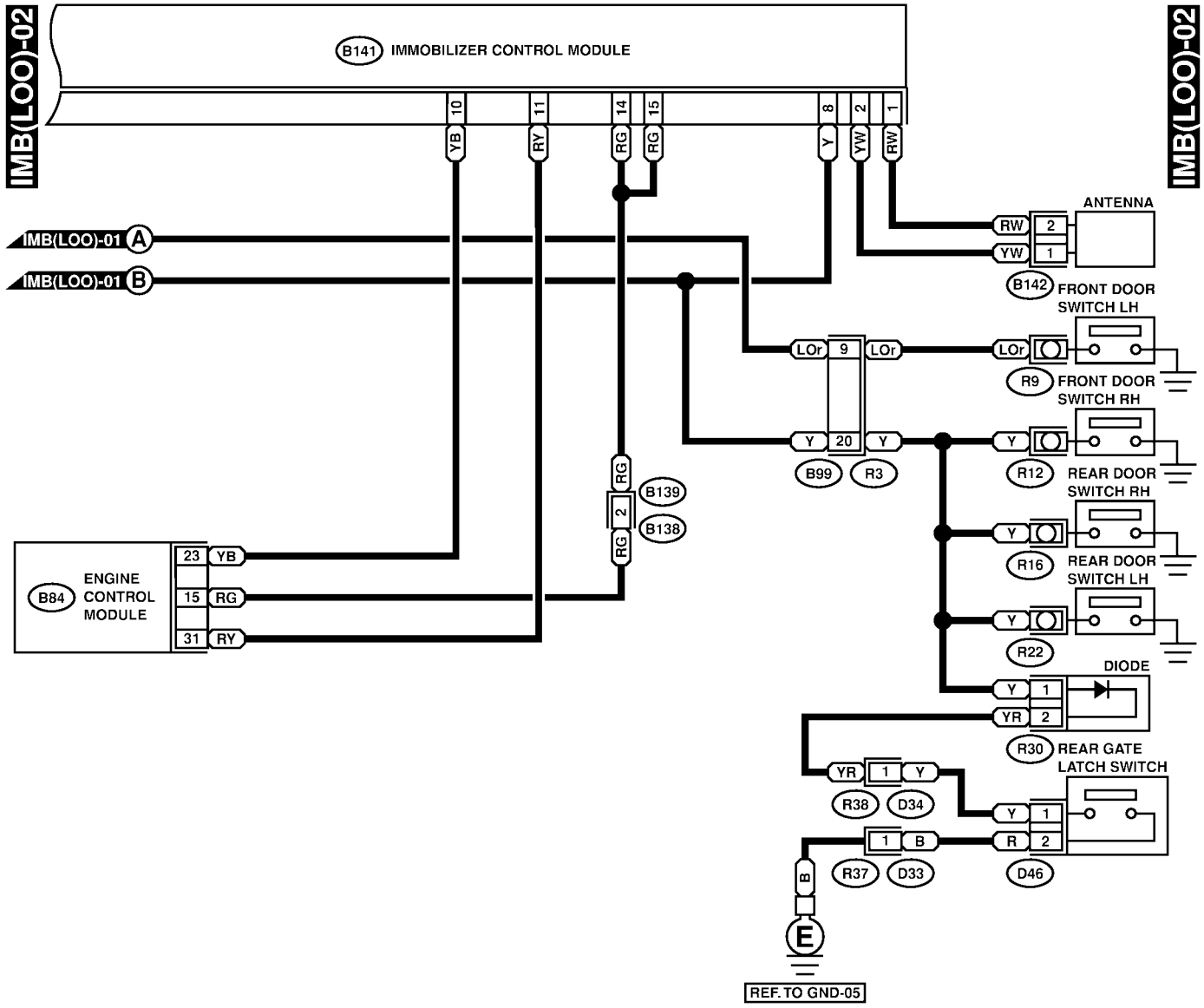
IMB(LOO)-02
B141 IMMOBILIZER CONTROL MODULE
10 YB
11 RY
14 RG
15 RG
8 Y
2 YW
1 RW
IMB(LOO)-01 A
IMB(LOO)-01 B
ANTENNA
RW 2
YW 1
B142 FRONT DOOR SWITCH LH
LOr 9 LOr
LOr
R9 FRONT DOOR SWITCH RH
Y 20 Y
Y
B99 R3
R12 REAR DOOR SWITCH RH
RG
2
RG
B139
B138
Y
R16 REAR DOOR SWITCH LH
B84 ENGINE CONTROL MODULE
23 YB
15 RG
31 RY
Y
R22
DIODE
Y 1
YR 2
R30 REAR GATE LATCH SWITCH
YR 1 Y
R38 D34
Y 1
1 B
R 2
R37 D33
D46
B
E
REF. TO GND-05

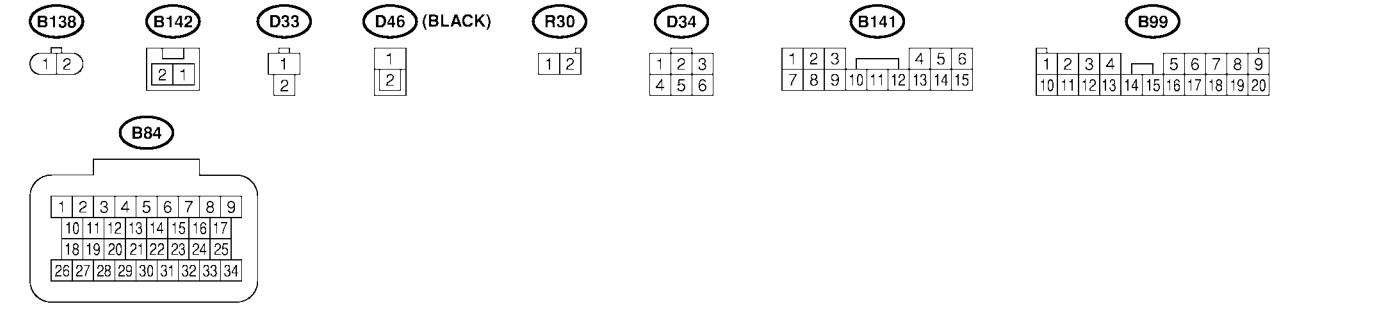
B138
B142
D33
D46 (BLACK)
R30
D34
B141
B99
B84

SL91-21B

3. RHD MODEL WITH OBD S903346A2105

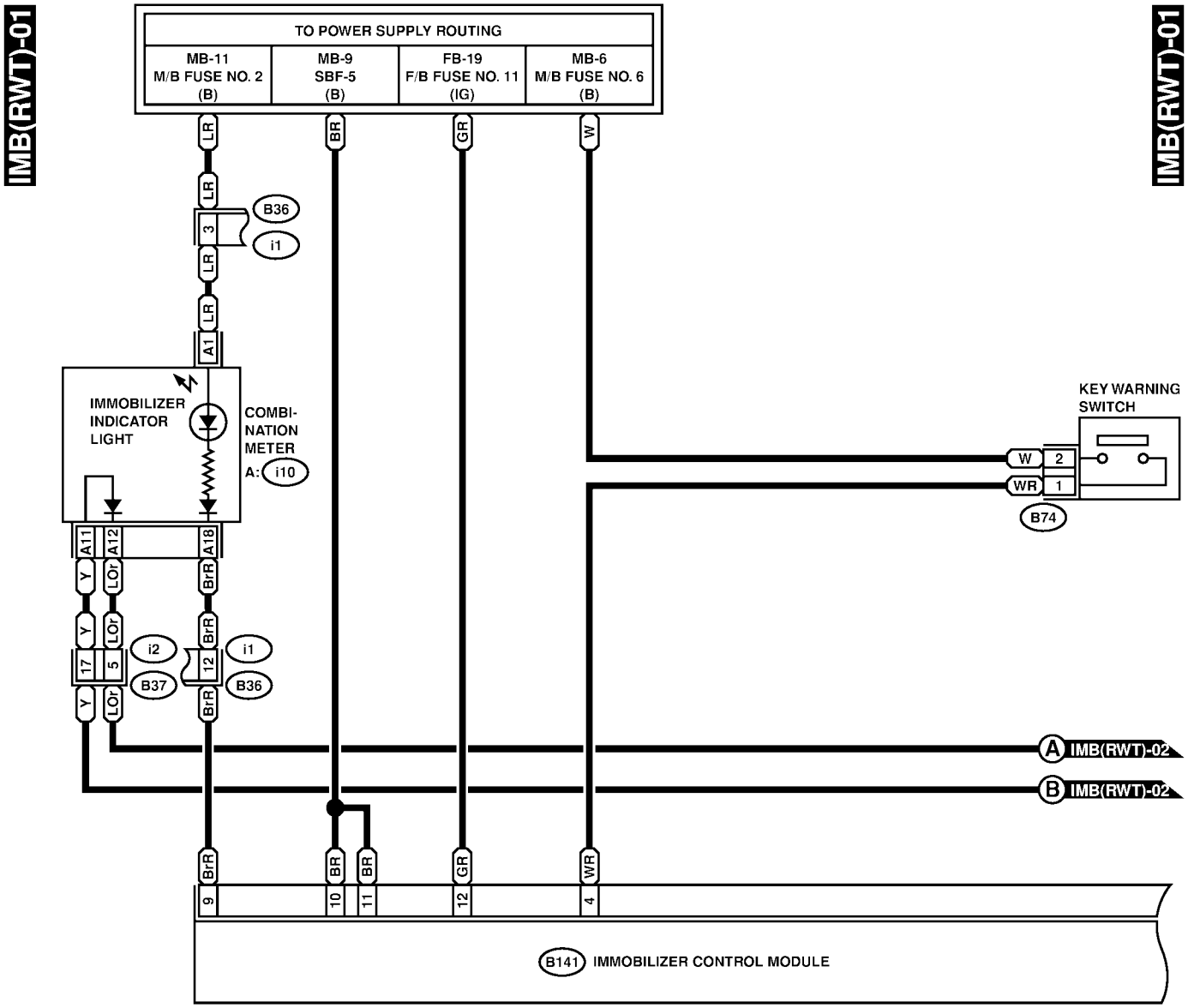

SR91-20A

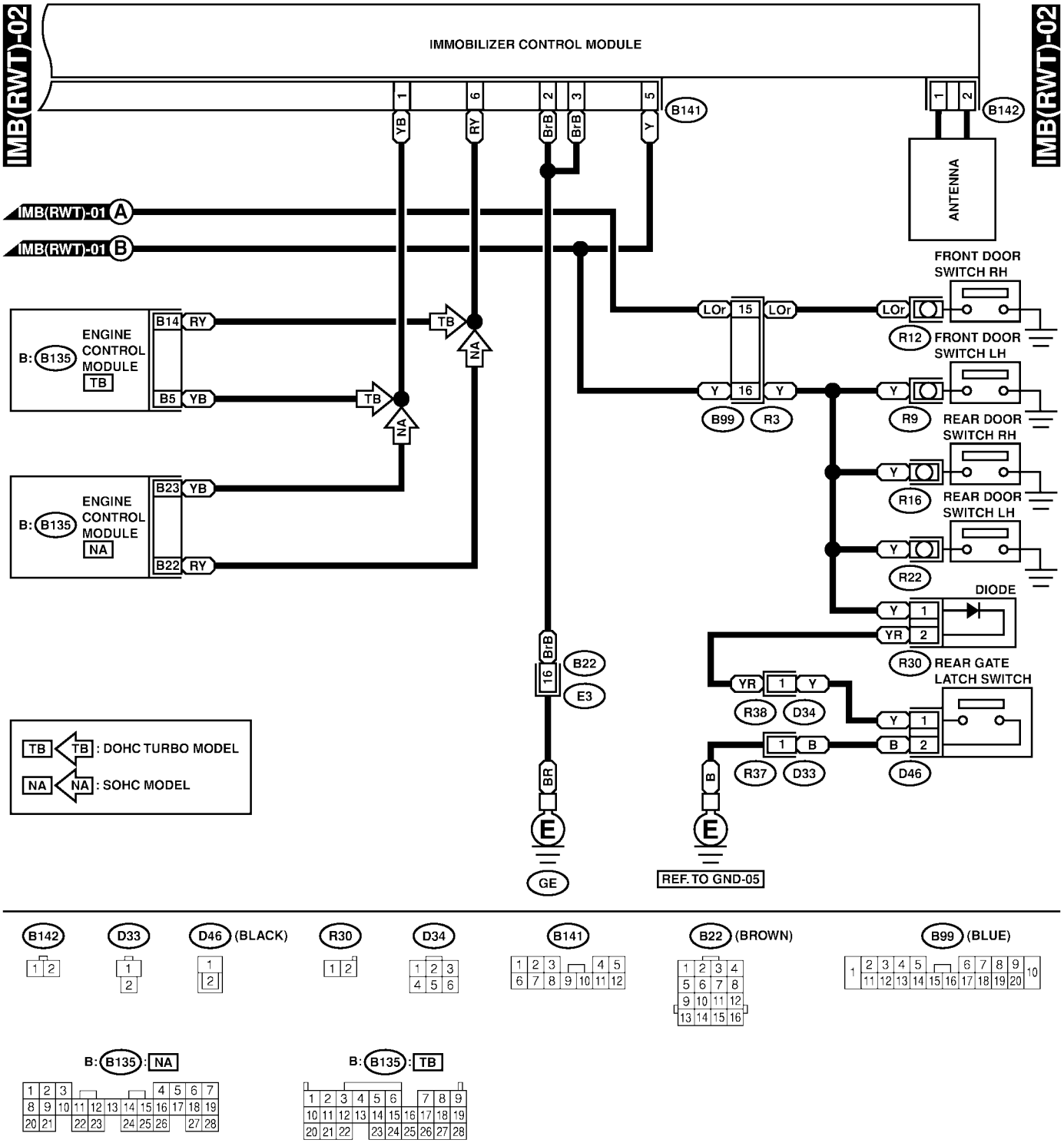
IMB(RWT)-02
IMMOBILIZER CONTROL MODULE
B141
B142
ANTENNA
IMB(RWT)-01 A
IMB(RWT)-01 B
FRONT DOOR SWITCH RH
R12
FRONT DOOR SWITCH LH
R9
REAR DOOR SWITCH RH
R16
REAR DOOR SWITCH LH
R22
DIODE
R30
REAR GATE LATCH SWITCH
R38
D34
R37
D33
D46
B99
R3
B22
E3
GE
REF. TO GND-05
B: B135
ENGINE CONTROL MODULE
TB
NA
B14
B5
B23
B22
TB : DOHC TURBO MODEL
NA : SOHC MODEL
B142
D33
D46 (BLACK)
R30
D34
B141
B22 (BROWN)
B99 (BLUE)
B: B135 : NA
B: B135 : TB

SR91-20B

4. RHD NON-TURBO MODEL WITHOUT OBD S903346A2106

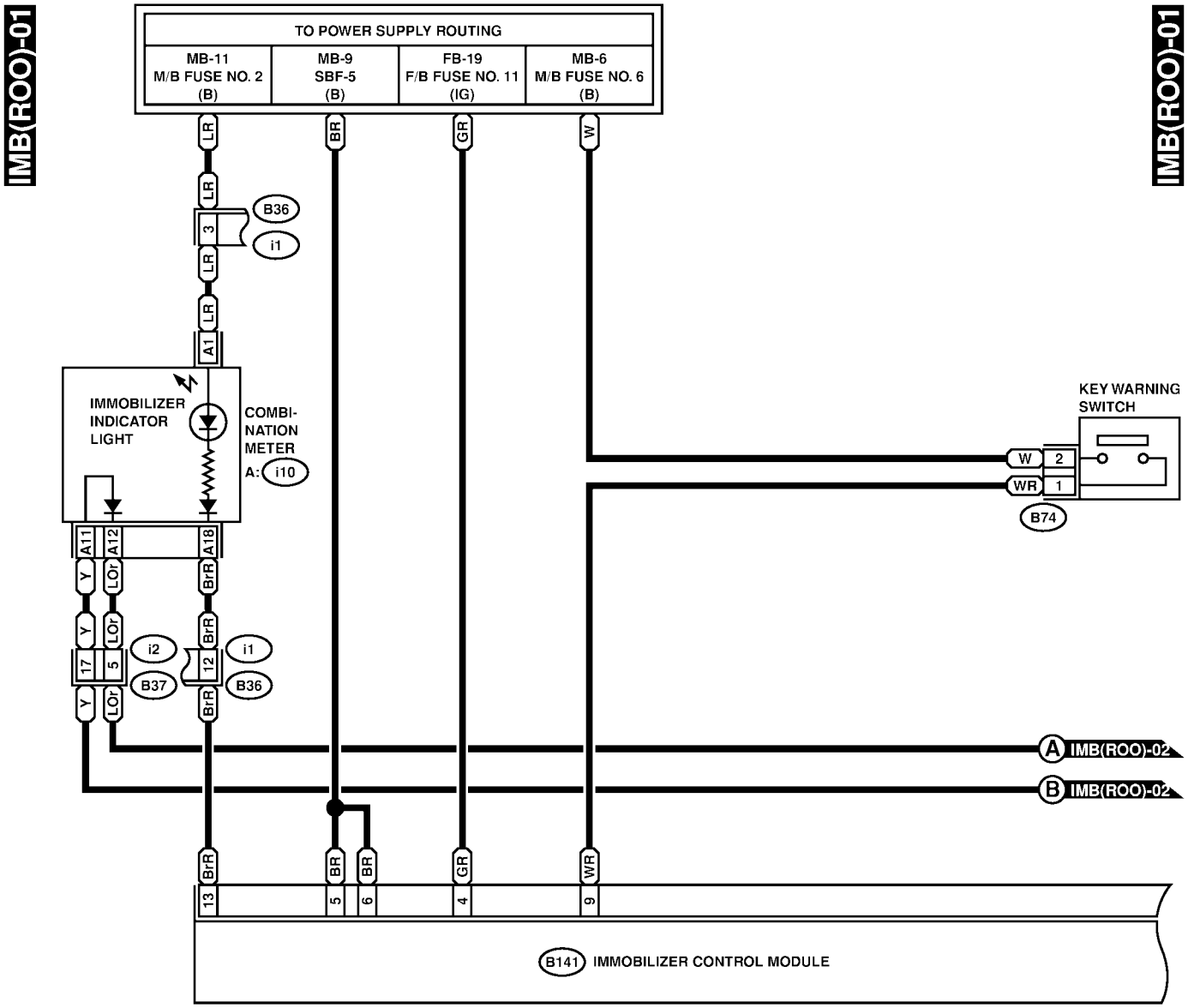

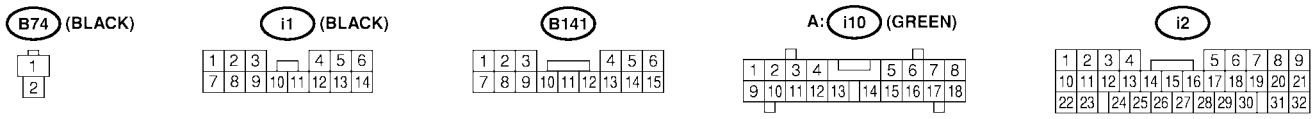

SR91-21A

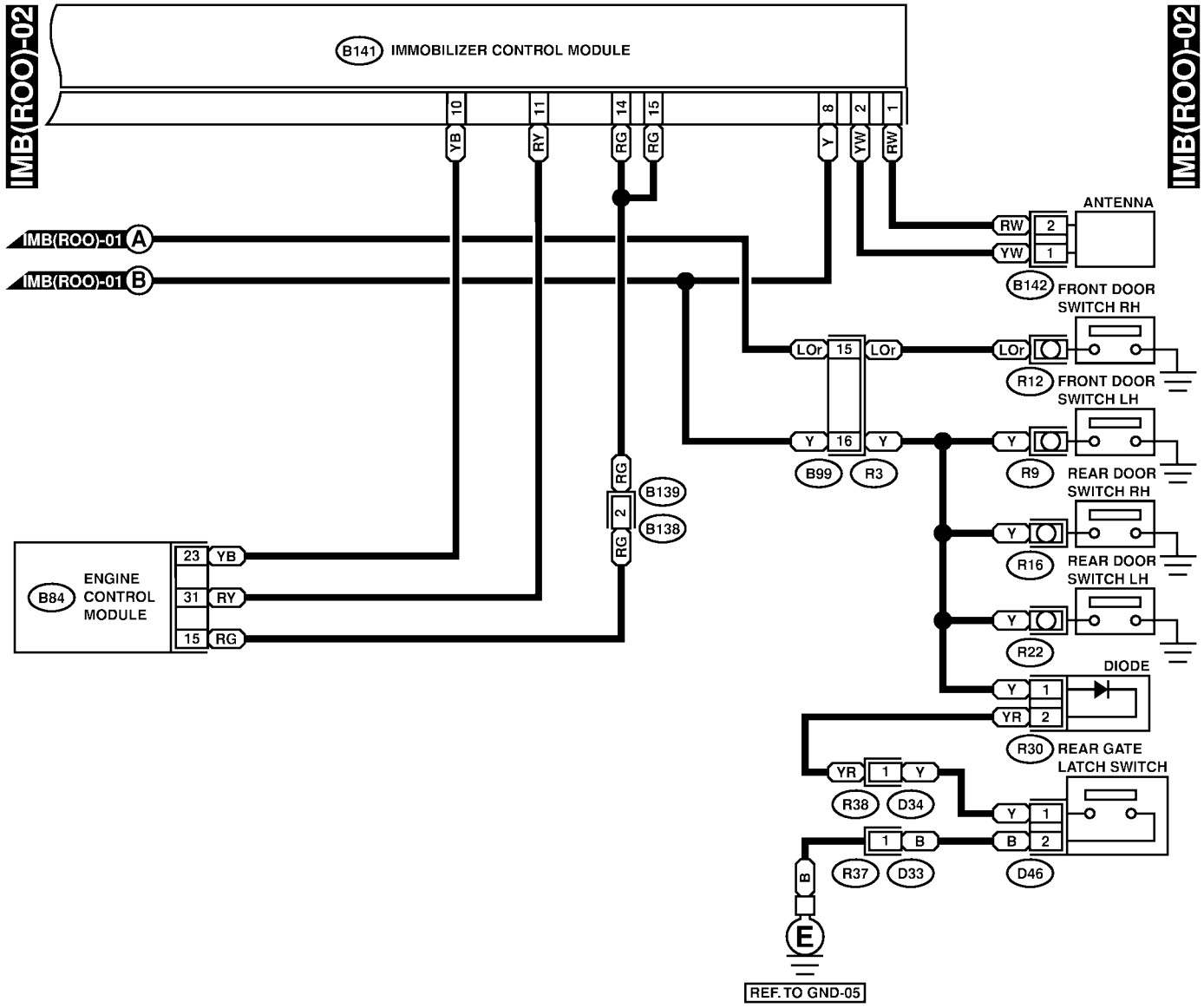
IMB(ROO)-02
B141 IMMOBILIZER CONTROL MODULE
10 YB
11 RY
14 RG
15 RG
8 Y
2 YW
1 RW
IMB(ROO)-01 A
IMB(ROO)-01 B
ANTENNA
RW 2
YW 1
B142 FRONT DOOR SWITCH RH
LOr 15 LOr
LOr
R12 FRONT DOOR SWITCH LH
Y 16 Y
B99 R3
Y
R9 REAR DOOR SWITCH RH
RG
2
RG
B139
B138
Y
R16 REAR DOOR SWITCH LH
B84 ENGINE CONTROL MODULE
23 YB
31 RY
15 RG
Y
R22
DIODE
Y 1
YR 2
R30 REAR GATE LATCH SWITCH
YR 1 Y
R38 D34
Y 1
1 B
B 2
R37 D33
D46
B
E
REF. TO GND-05

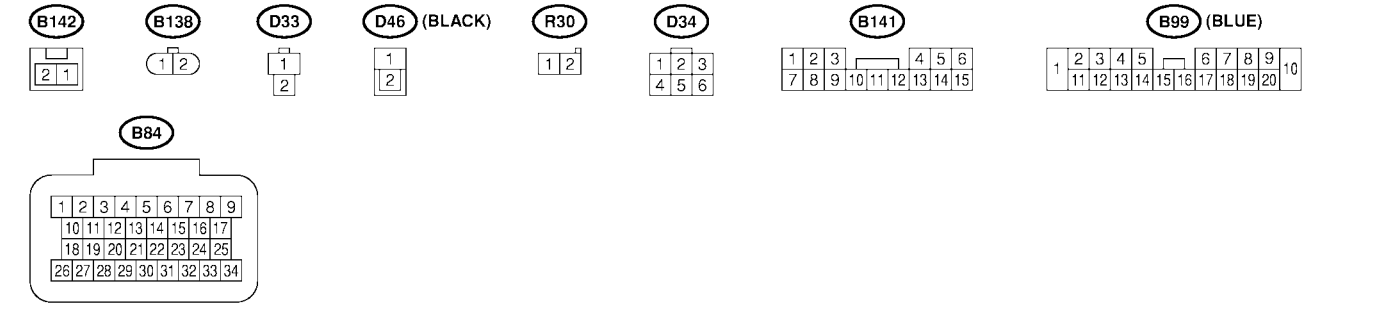
B142
B138
D33
D46 (BLACK)
R30
D34
B141
B99 (BLUE)
B84

SR91-21B

26. In Compartment Light System S903665

A: SCHEMATIC S903665A21

1. LHD MODEL S903665A2101

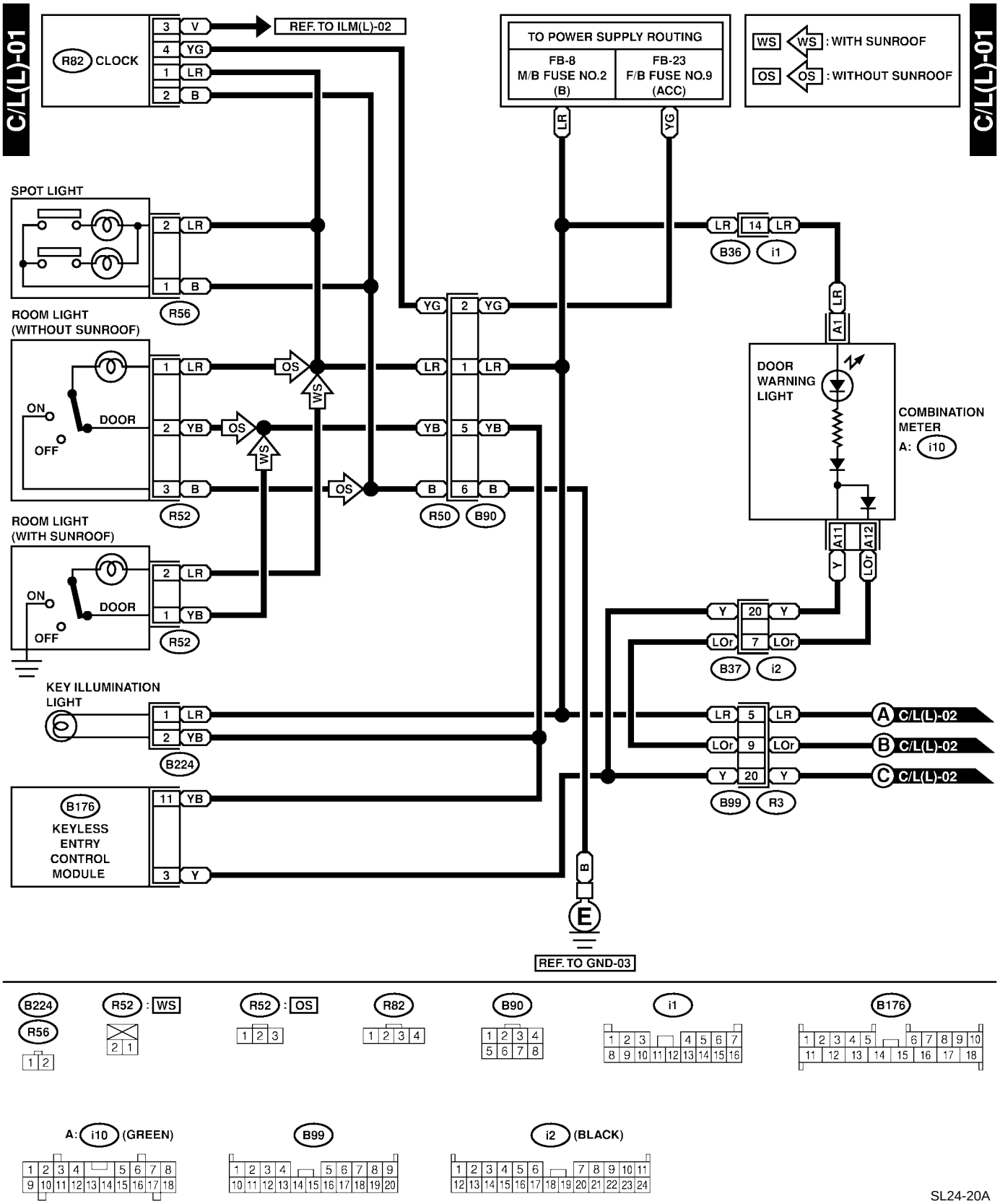

SL24-20A

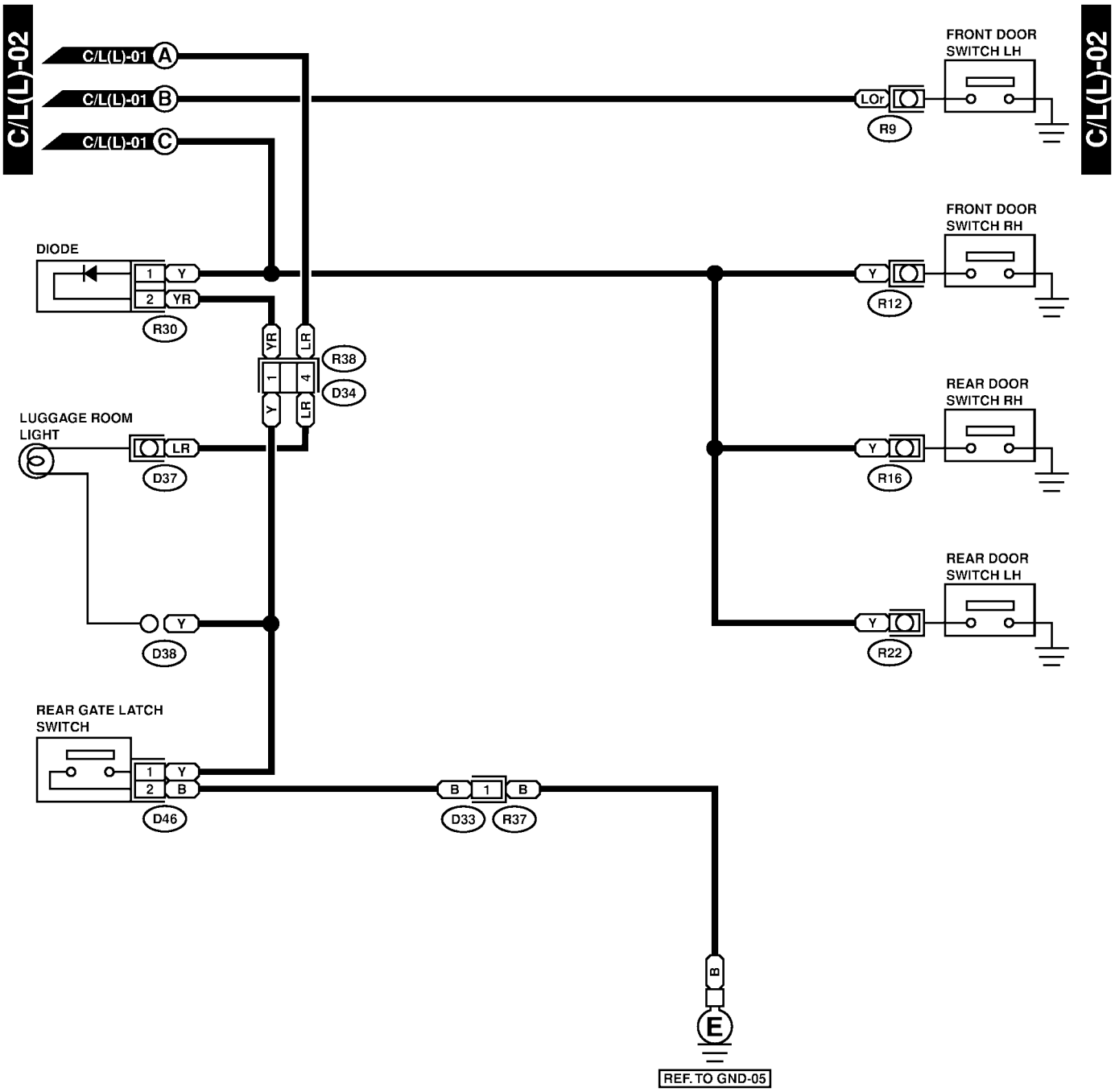
C/L(L)-02
C/L(L)-01 A
C/L(L)-01 B
C/L(L)-01 C
FRONT DOOR SWITCH LH
LOr
R9
FRONT DOOR SWITCH RH
Y
R12
DIODE
1 Y
2 YR
R30
YR
LR
R38
1
4
D34
Y
LR
REAR DOOR SWITCH RH
Y
R16
LUGGAGE ROOM LIGHT
LR
D37
REAR DOOR SWITCH LH
Y
R22
Y
D38
REAR GATE LATCH SWITCH
1 Y
2 B
D46
B 1 B
D33 R37
B
E
REF. TO GND-05

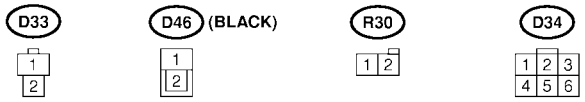
D33
1
2
D46 (BLACK)
1
2
R30
1 2
D34
1 2 3
4 5 6

SL24-20B

2. RHD MODEL S903665A2102

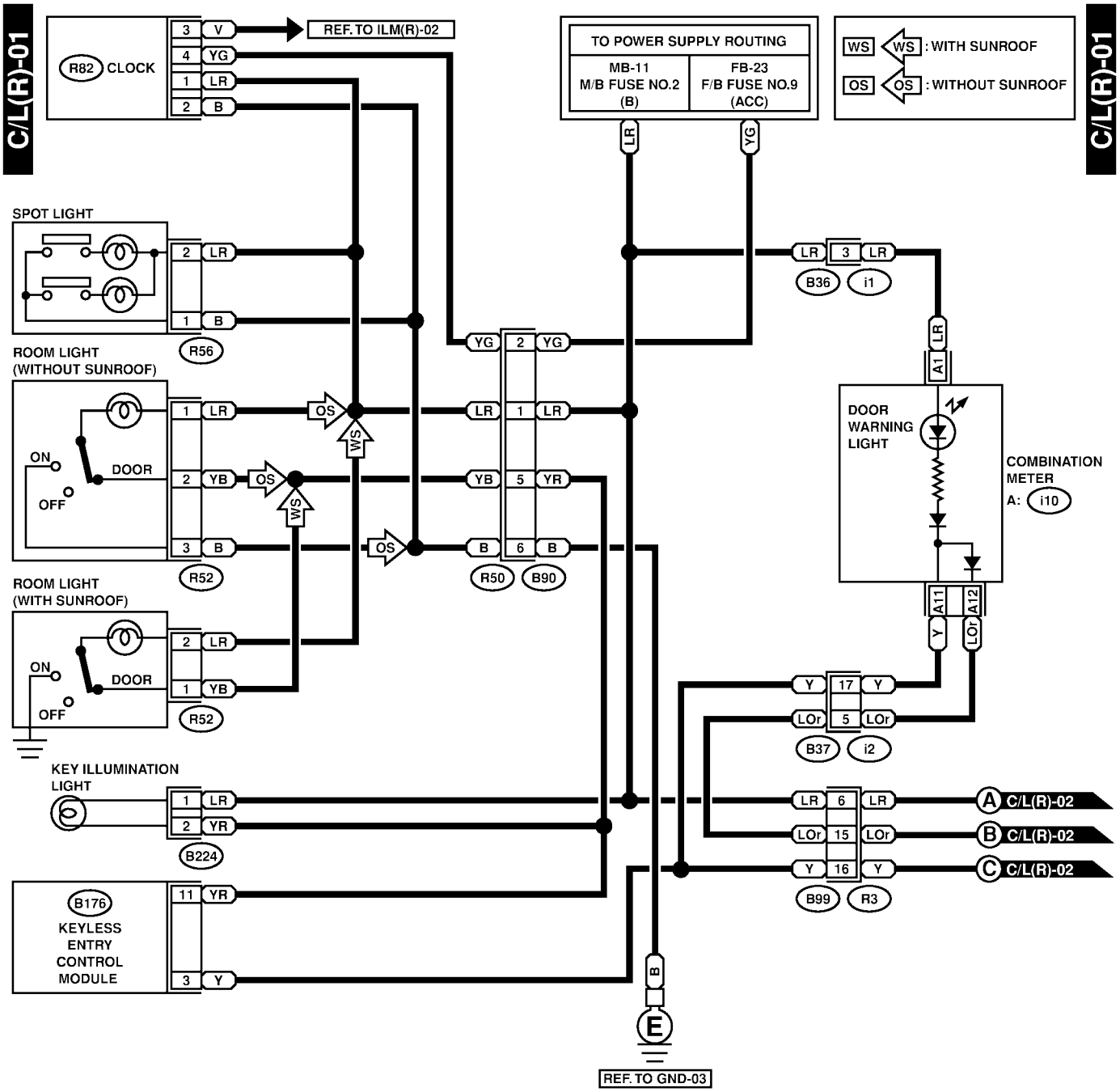

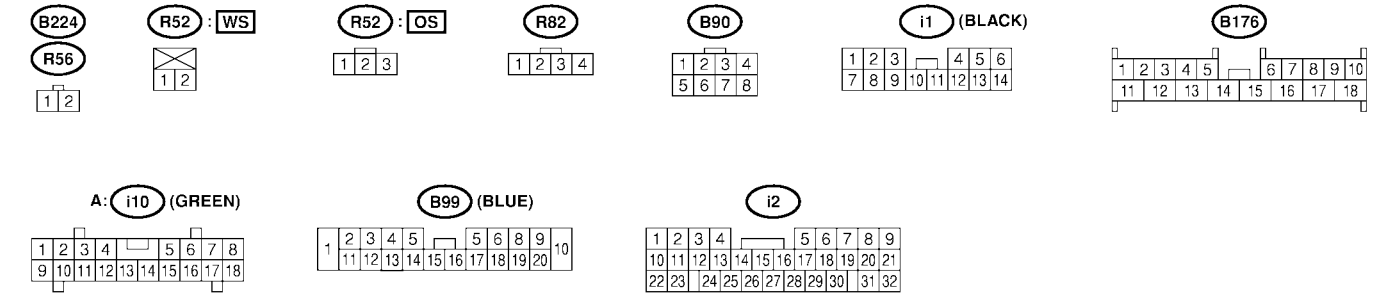

SR24-20A

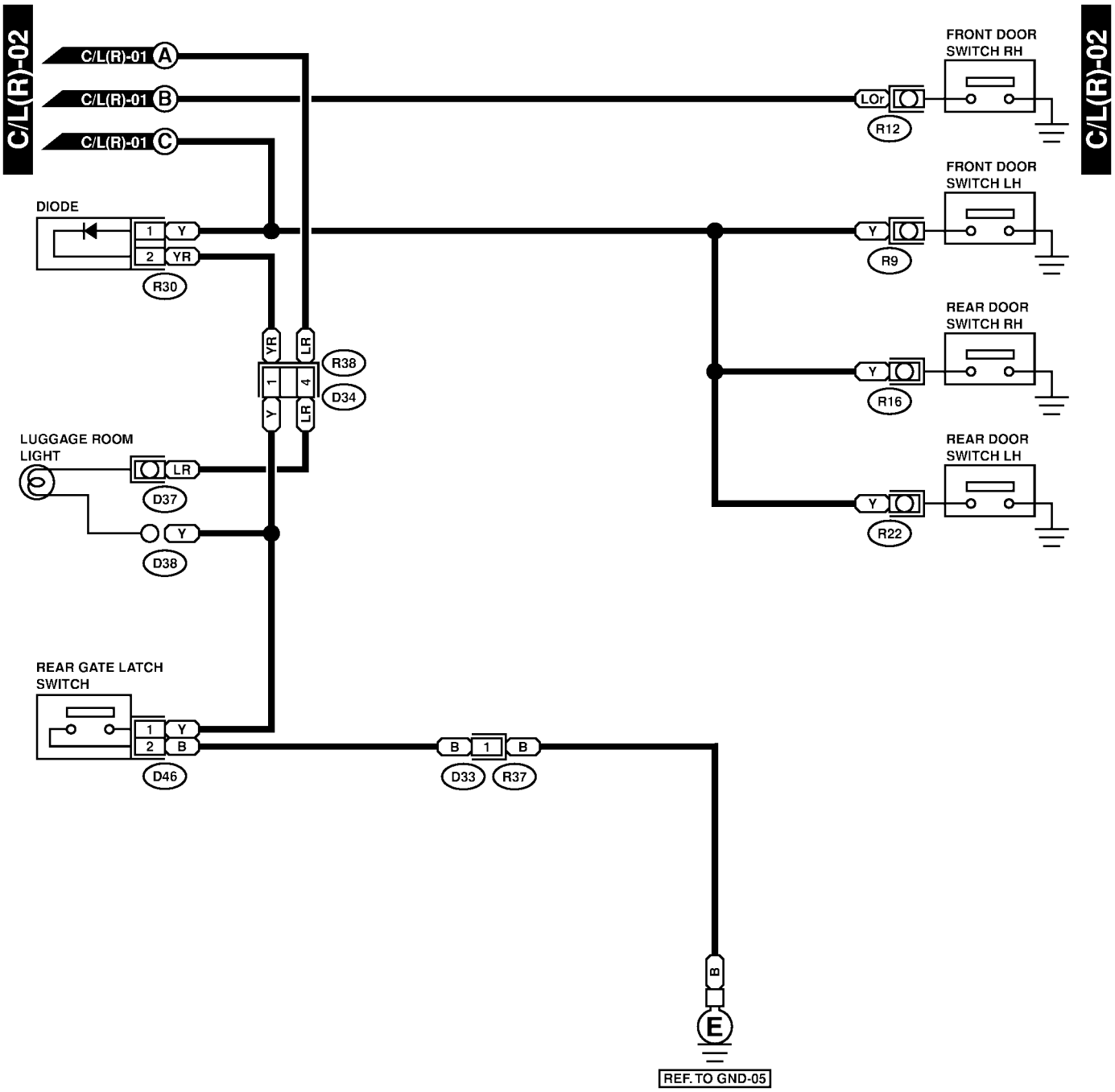
C/L(R)-02
C/L(R)-01 A
C/L(R)-01 B
C/L(R)-01 C
DIODE
1 Y
2 YR
R30
YR
LR
R38
1
4
D34
Y
LR
LUGGAGE ROOM LIGHT
LR
D37
Y
D38
REAR GATE LATCH SWITCH
1 Y
2 B
D46
B 1 B
D33 R37
B
E
REF. TO GND-05
FRONT DOOR SWITCH RH
LOr
R12
FRONT DOOR SWITCH LH
Y
R9
REAR DOOR SWITCH RH
Y
R16
REAR DOOR SWITCH LH
Y
R22
C/L(R)-02

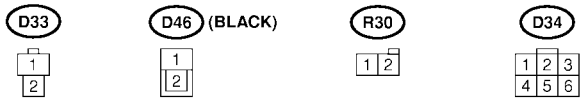
D33
1
2
D46 (BLACK)
1
2
R30
1 2
D34
1 2 3
4 5 6

SR24-20B

27. Keyless Entry System S903345

A: SCHEMATIC S903345A21

1. LHD MODEL S903345A2101

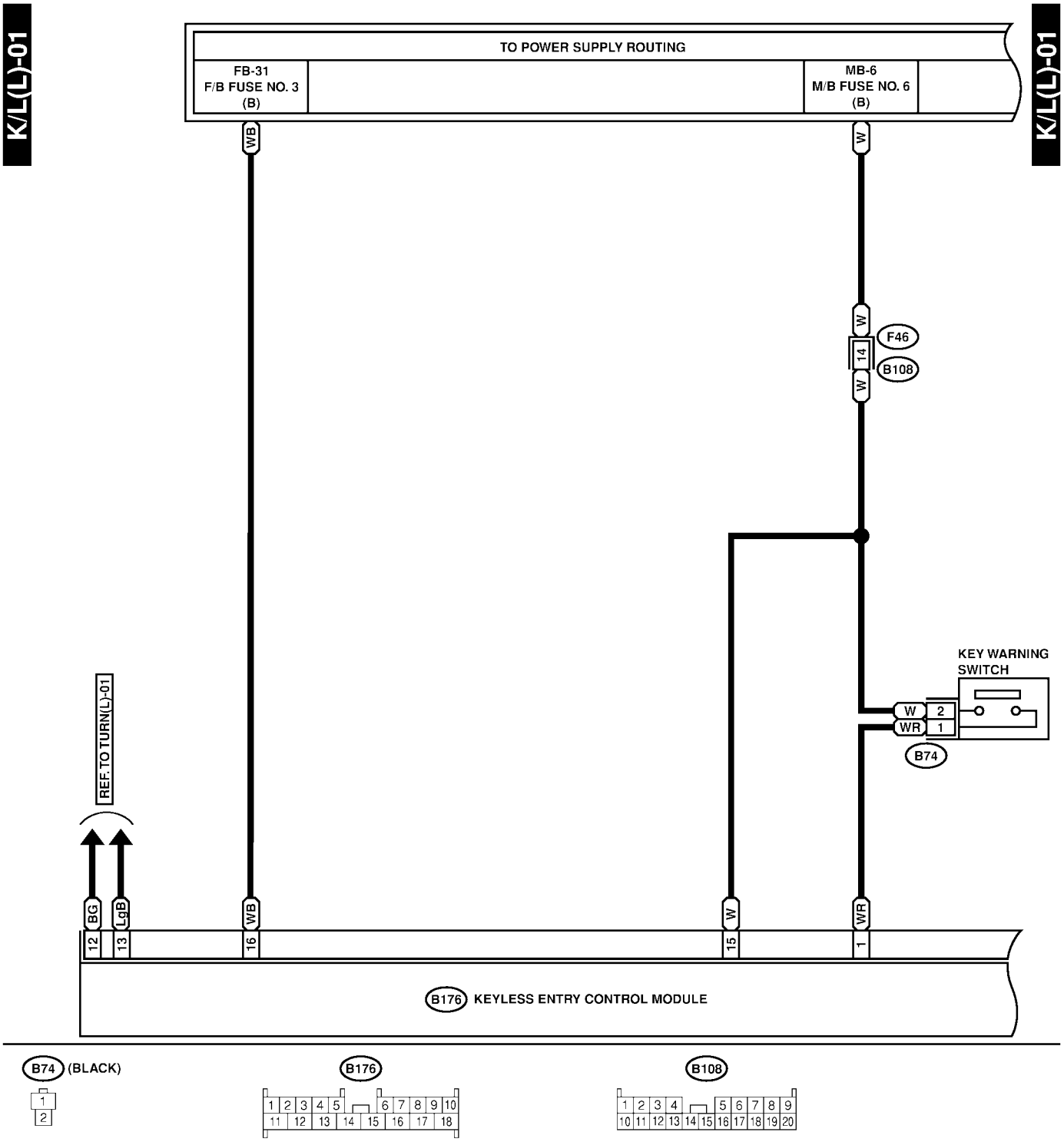

SL77-20A

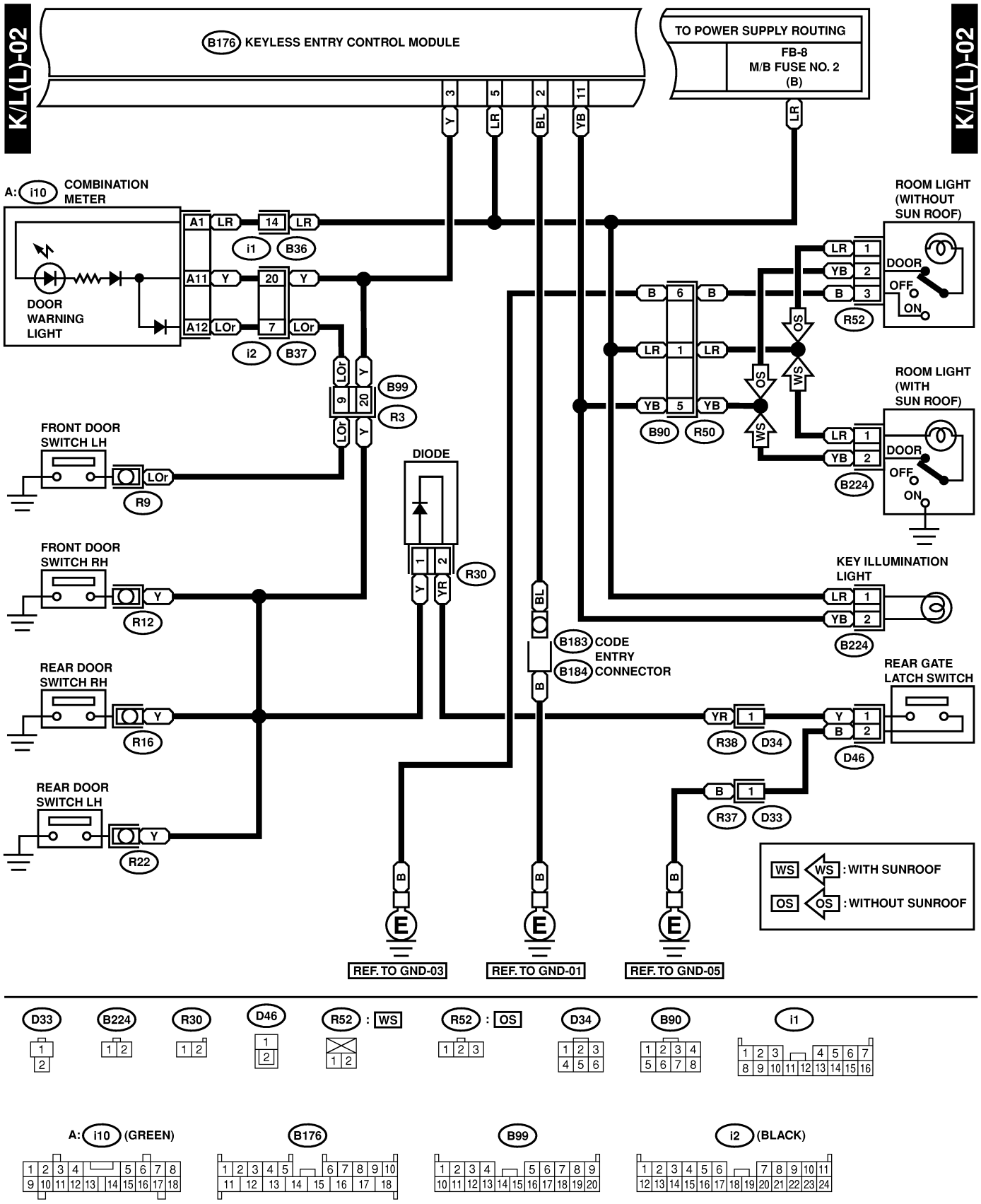
K/L(L)-02
B176 KEYLESS ENTRY CONTROL MODULE
TO POWER SUPPLY ROUTING
FB-8
M/B FUSE NO. 2
(B)
A: i10 COMBINATION METER
DOOR WARNING LIGHT
i1 B36
i2 B37
B99 R3
FRONT DOOR SWITCH LH
R9
FRONT DOOR SWITCH RH
R12
REAR DOOR SWITCH RH
R16
REAR DOOR SWITCH LH
R22
DIODE
R30
B90 R50
ROOM LIGHT (WITHOUT SUN ROOF)
R52
ROOM LIGHT (WITH SUN ROOF)
B224
KEY ILLUMINATION LIGHT
B224
B183 CODE ENTRY
B184 CONNECTOR
REAR GATE LATCH SWITCH
R38 D34
D46
R37 D33
WS : WITH SUNROOF
OS : WITHOUT SUNROOF
REF. TO GND-03
REF. TO GND-01
REF. TO GND-05
D33
B224
R30
D46
R52 : WS
R52 : OS
D34
B90
i1
A: i10 (GREEN)
B176
B99
i2 (BLACK)

SL77-20B

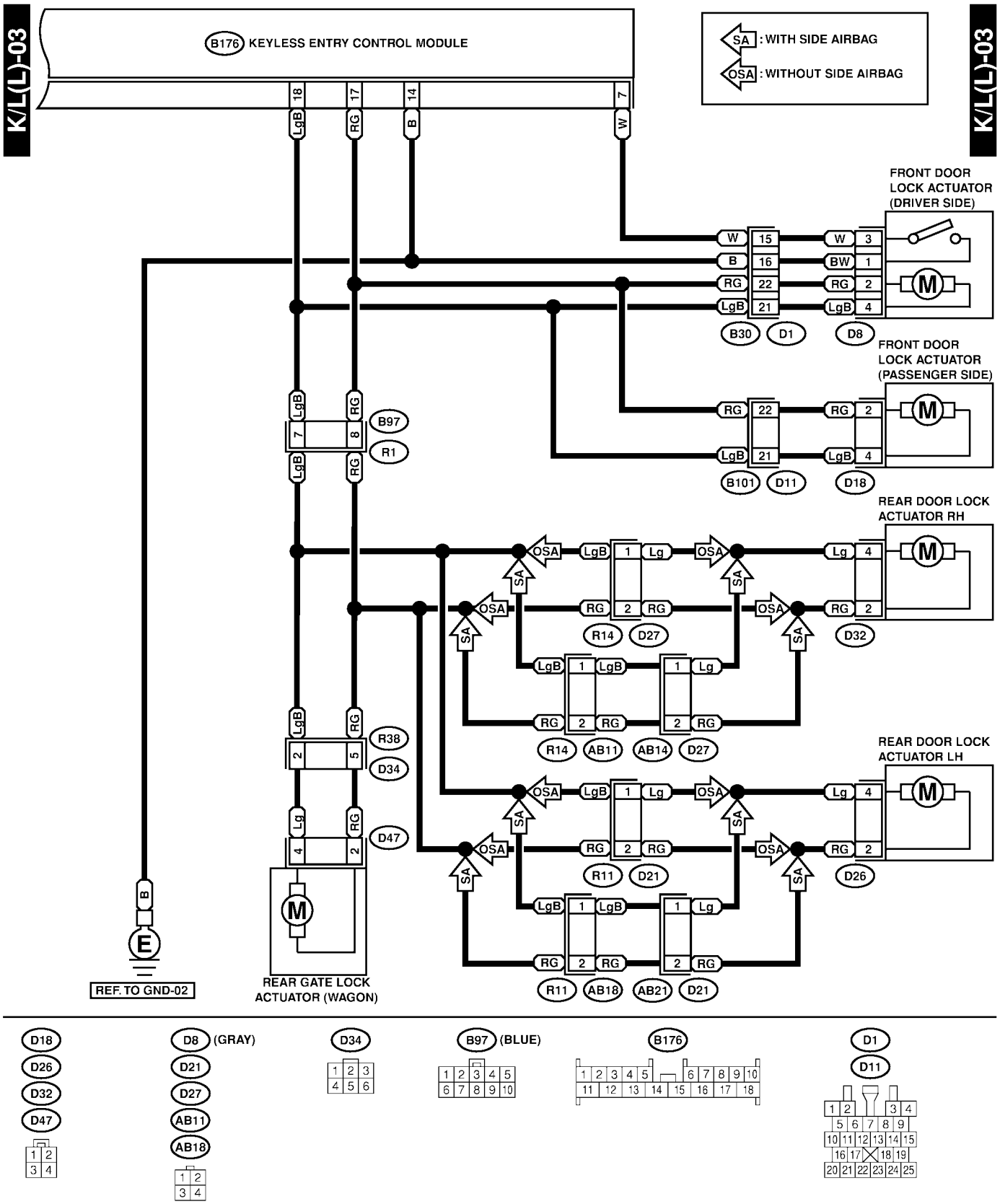
K/L(L)-03
B176 KEYLESS ENTRY CONTROL MODULE
SA : WITH SIDE AIRBAG
OSA : WITHOUT SIDE AIRBAG
FRONT DOOR LOCK ACTUATOR (DRIVER SIDE)
FRONT DOOR LOCK ACTUATOR (PASSENGER SIDE)
REAR DOOR LOCK ACTUATOR RH
REAR DOOR LOCK ACTUATOR LH
REAR GATE LOCK ACTUATOR (WAGON)
REF. TO GND-02
B30 D1 D8
B101 D11 D18
B97 R1
R38 D34
D47
R14 D27 D32
R14 AB11 AB14 D27
R11 D21 D26
R11 AB18 AB21 D21
D18 D26 D32 D47
D8 (GRAY) D21 D27 AB11 AB18
D34
B97 (BLUE)
B176
D1 D11

SL77-20C

2. RHD MODEL S903345A2102

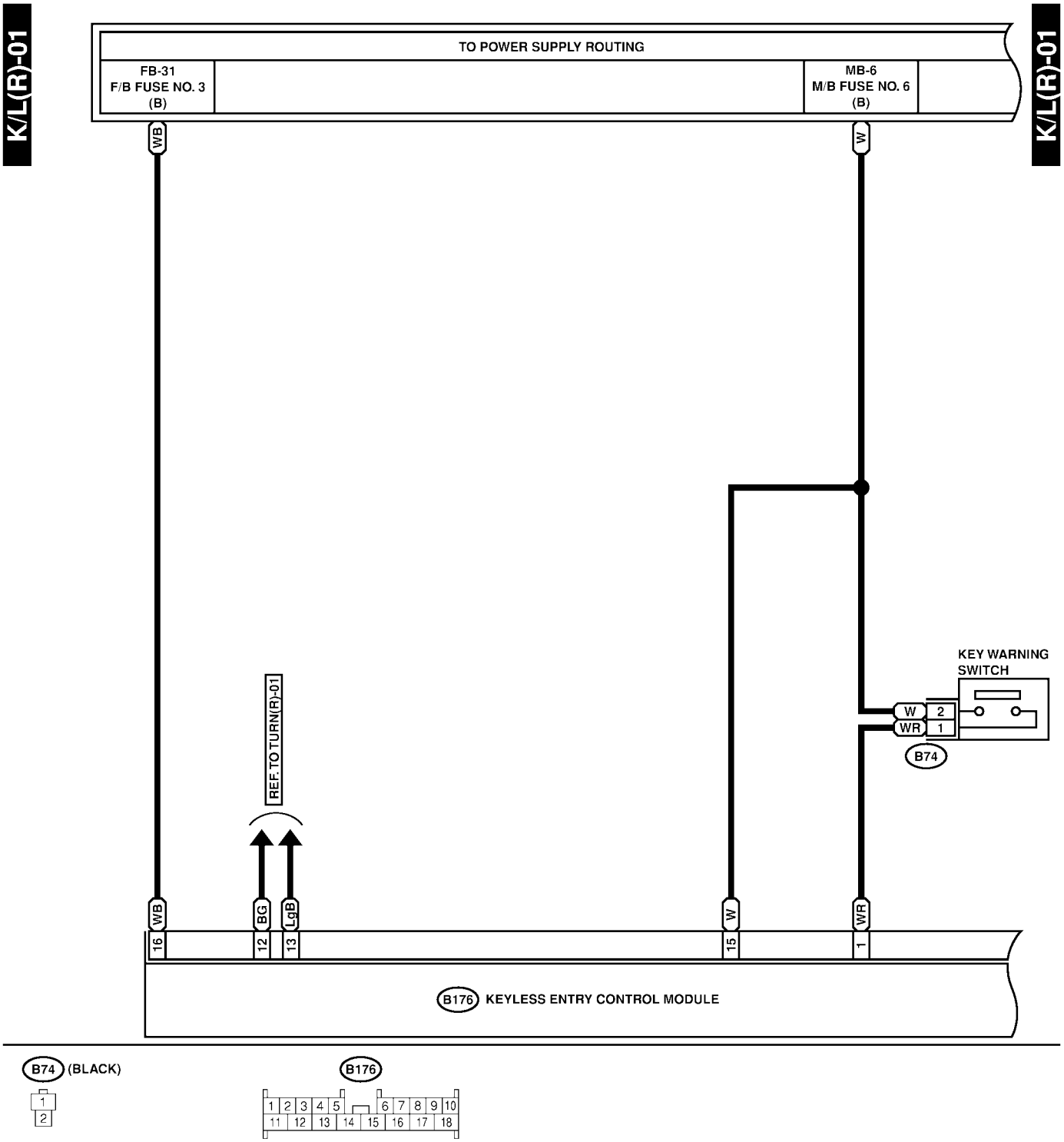

SR77-20A

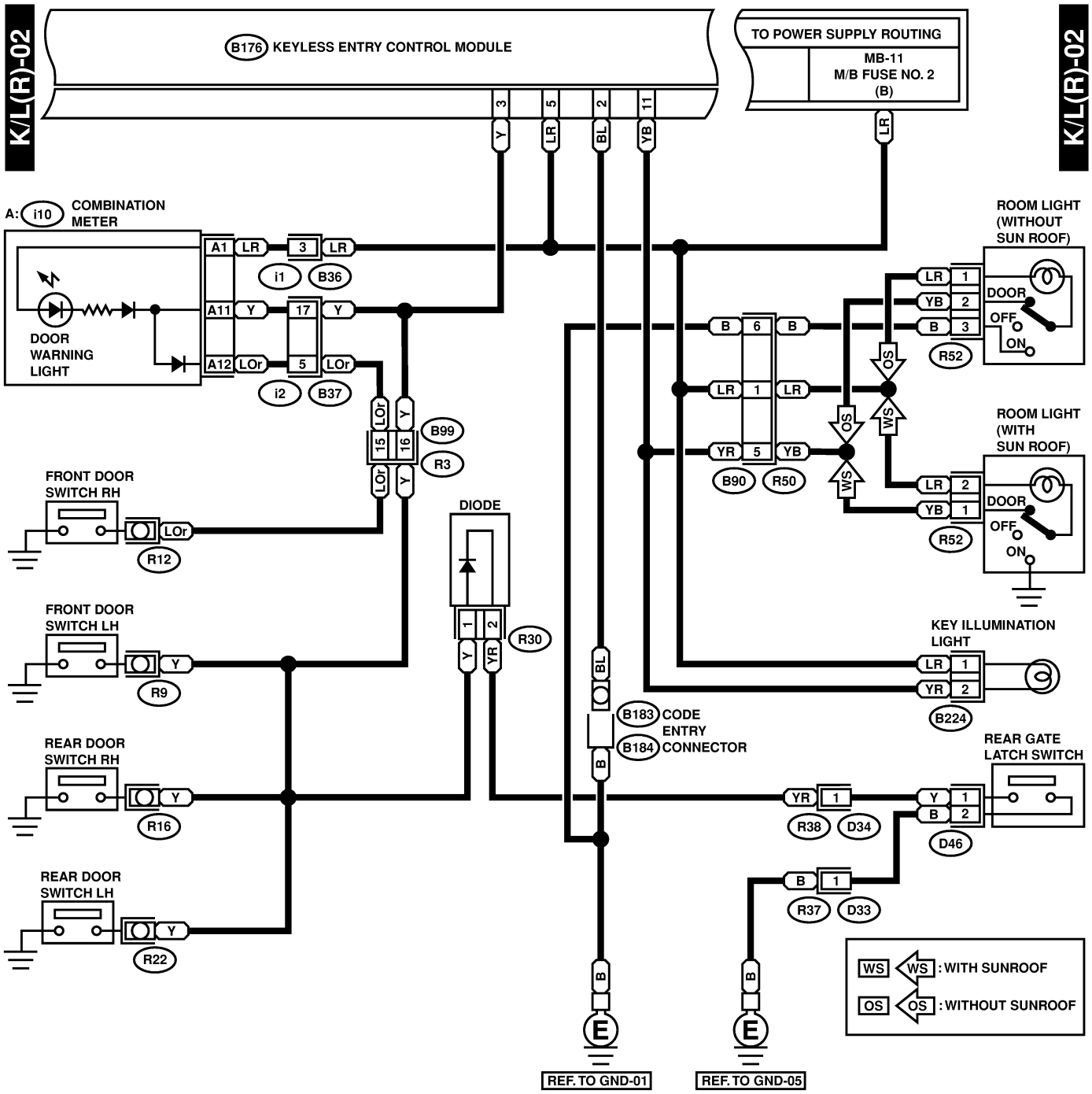
K/L(R)-02
B176 KEYLESS ENTRY CONTROL MODULE
TO POWER SUPPLY ROUTING
MB-11
M/B FUSE NO. 2
(B)
A: i10 COMBINATION METER
DOOR WARNING LIGHT
i1 B36
i2 B37
B99 R3
FRONT DOOR SWITCH RH
R12
FRONT DOOR SWITCH LH
R9
REAR DOOR SWITCH RH
R16
REAR DOOR SWITCH LH
R22
DIODE
R30
B90 R50
ROOM LIGHT (WITHOUT SUN ROOF)
R52
ROOM LIGHT (WITH SUN ROOF)
R52
KEY ILLUMINATION LIGHT
B224
B183 CODE ENTRY
B184 CONNECTOR
REAR GATE LATCH SWITCH
R38 D34
D46
R37 D33
WS : WITH SUNROOF
OS : WITHOUT SUNROOF
REF. TO GND-01
REF. TO GND-05
D33
B224
R30
D46
R52 : WS
R52 : OS
D34
B90
i1 (BLACK)
A: i10 (GREEN)
B176
B99 (BLUE)
i2

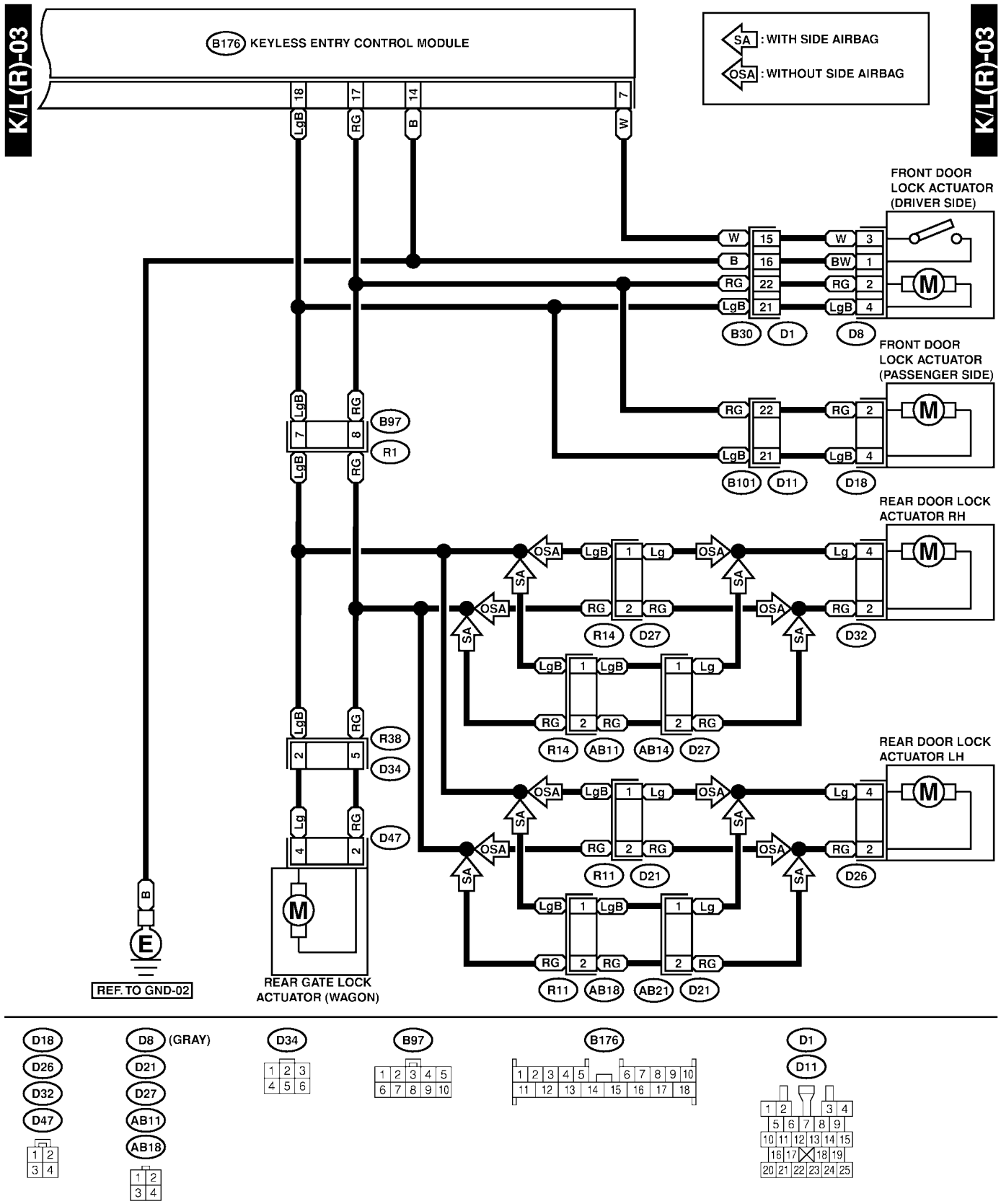
K/L(R)-03
B176 KEYLESS ENTRY CONTROL MODULE
SA : WITH SIDE AIRBAG
OSA : WITHOUT SIDE AIRBAG
FRONT DOOR LOCK ACTUATOR (DRIVER SIDE)
B30
D1
D8
FRONT DOOR LOCK ACTUATOR (PASSENGER SIDE)
B101
D11
D18
REAR DOOR LOCK ACTUATOR RH
R14
D27
D32
AB11
AB14
REAR DOOR LOCK ACTUATOR LH
R11
D21
D26
AB18
AB21
B97
R1
R38
D34
D47
REF. TO GND-02
REAR GATE LOCK ACTUATOR (WAGON)
D18
D26
D32
D47
D8 (GRAY)
D21
D27
AB11
AB18
D34
B97
B176
D1
D11

SR77-20C

28. Oil Pressure and Temperature Gauge System S903725

A: SCHEMATIC S903725A21

1. LHD MODEL S903725A2101

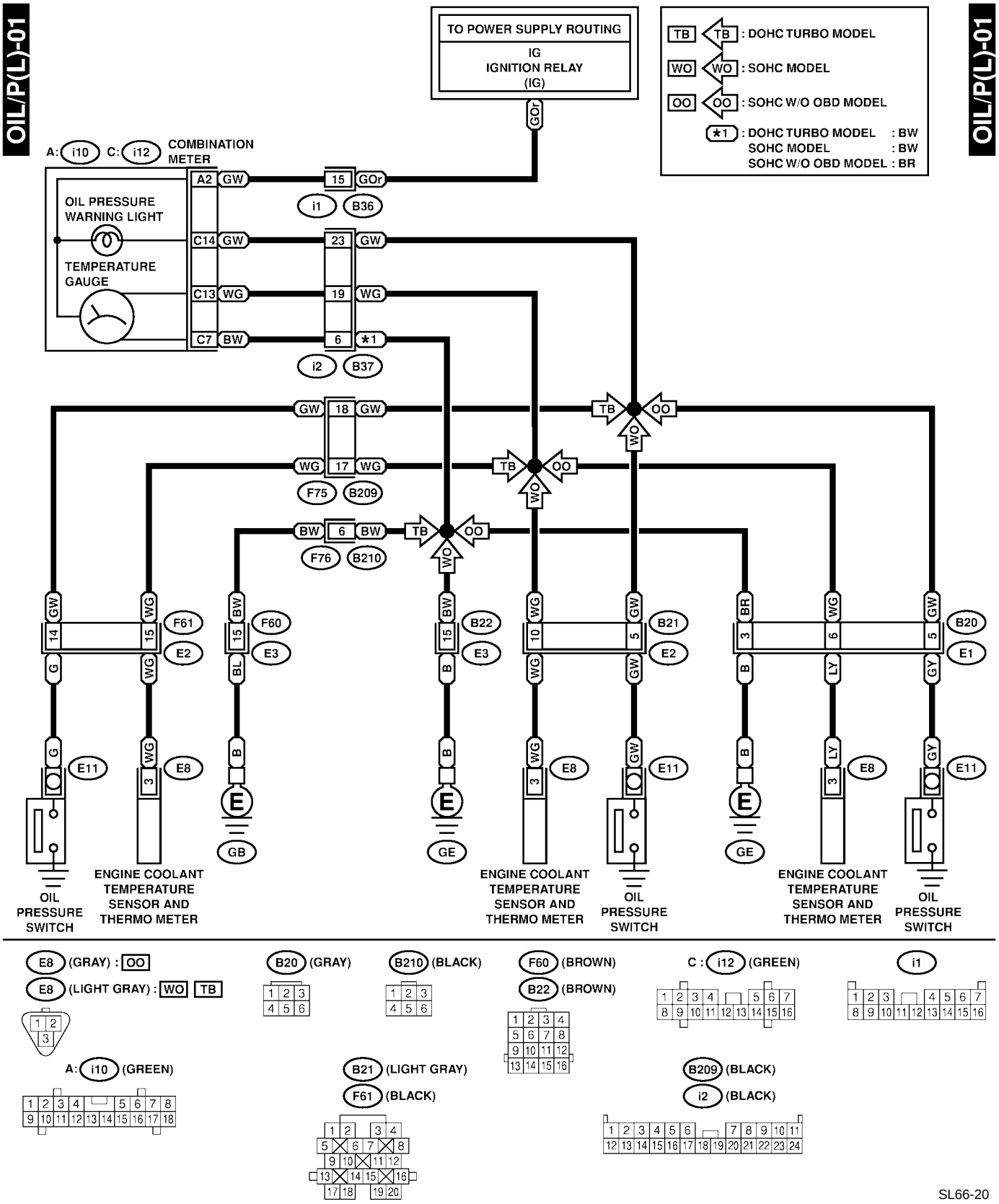

2. RHD MODEL S903725A2102

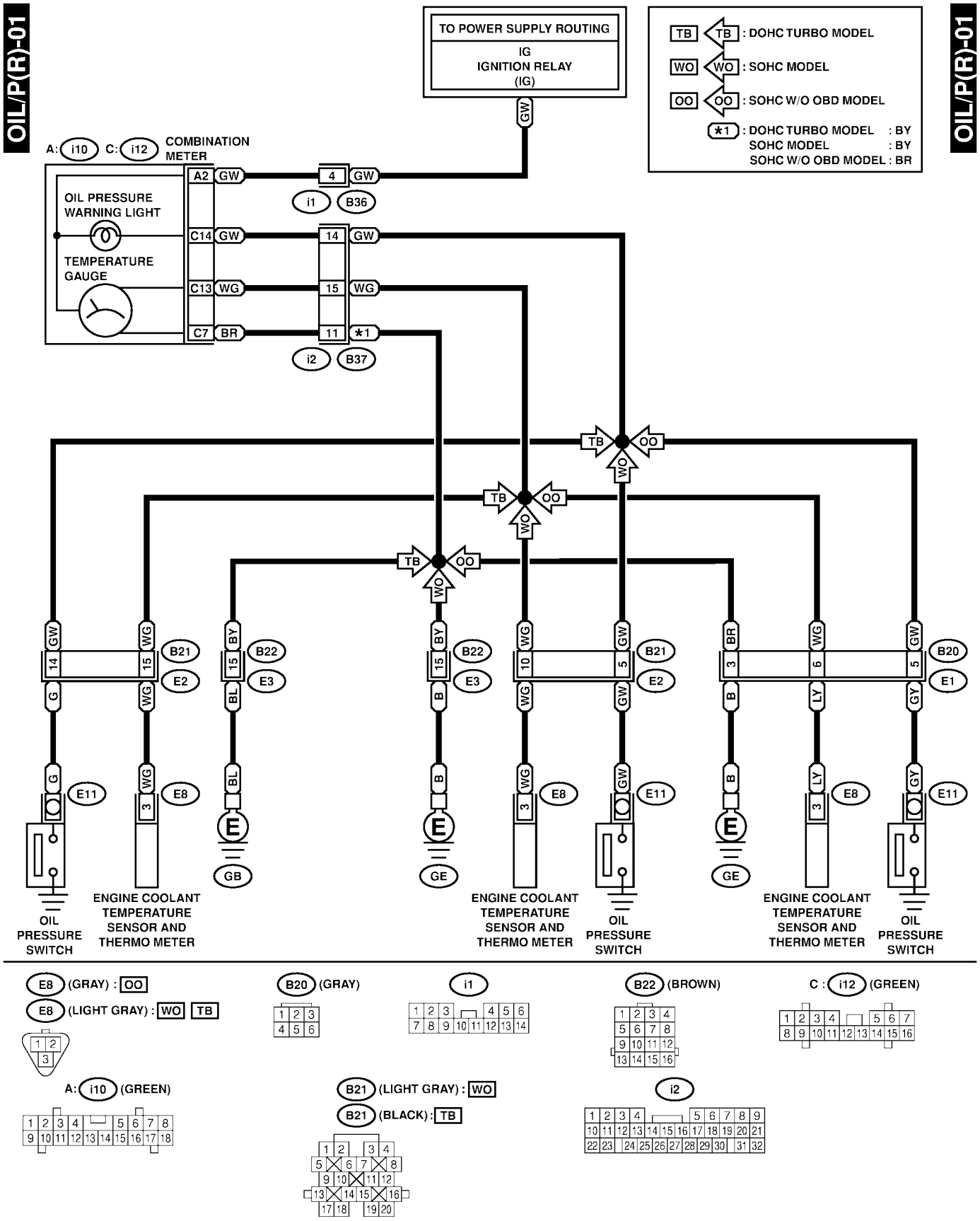

SR66-20

29. Outside Temperature Display System S903668

A: SCHEMATIC S903668A21

1. LHD MODEL S903668A2191

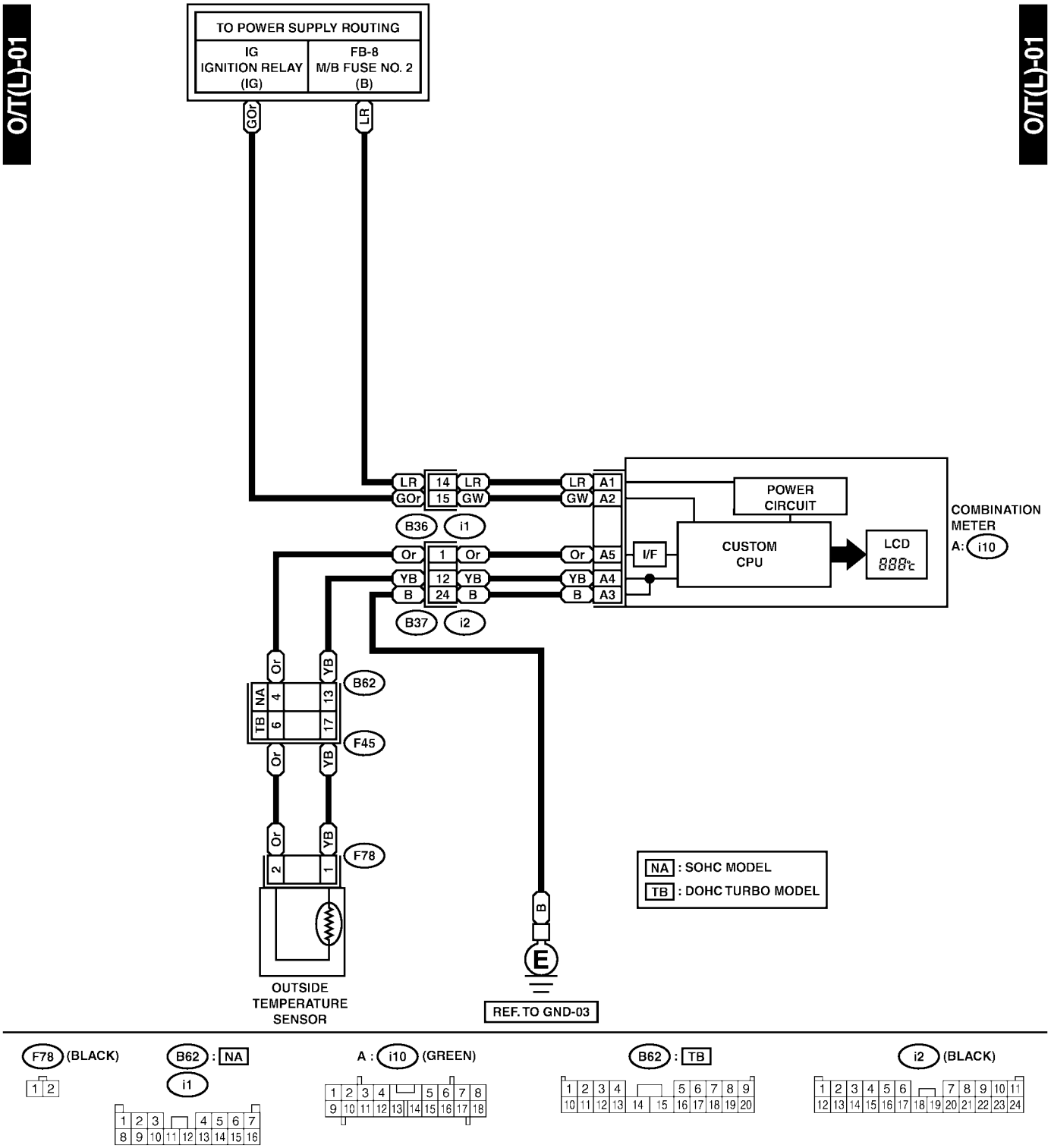

SL96-20

2. RHD MODEL S903668A2102

O/T(R)-01

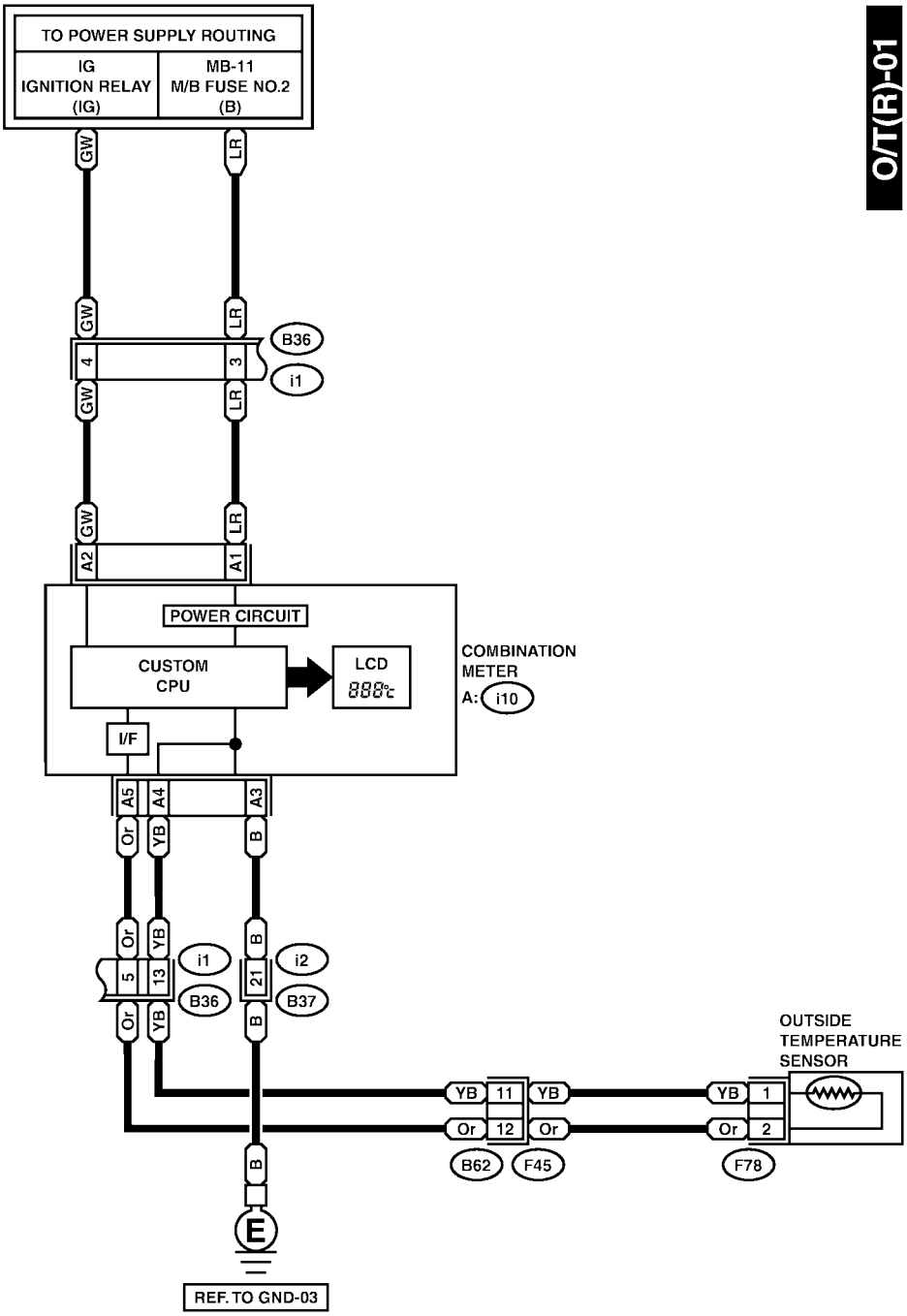

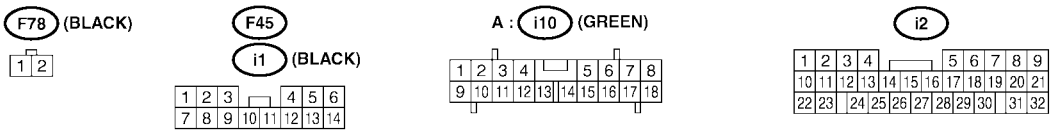

O/T(R)-01

SR96-20

30. Parking Brake and Brake Fluid Level Warning System S903478

A: SCHEMATIC S903478A21

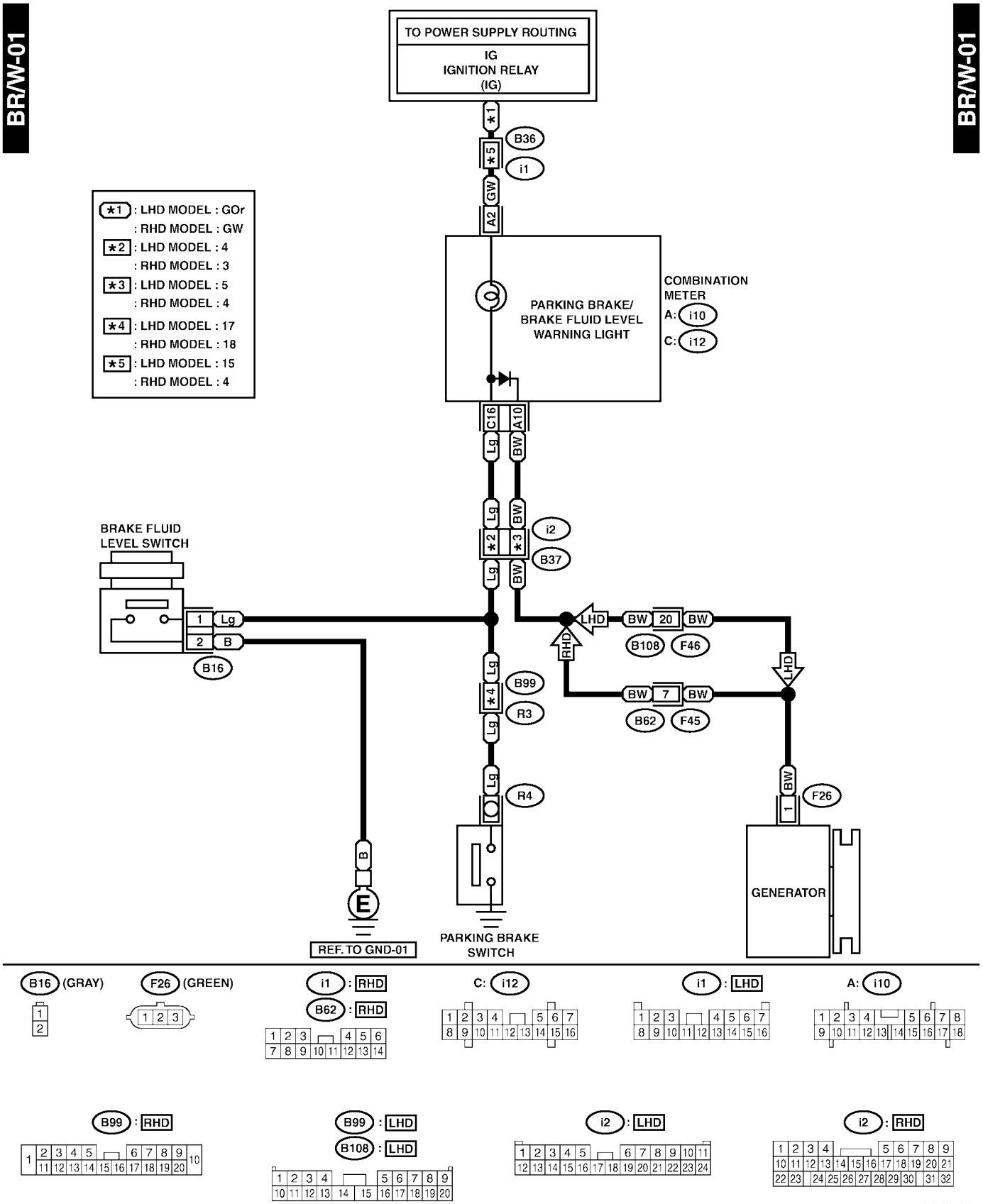

MEMO:

31. Power Window System S903456

A: SCHEMATIC S903456A21

1. LHD MODEL S903456A2101

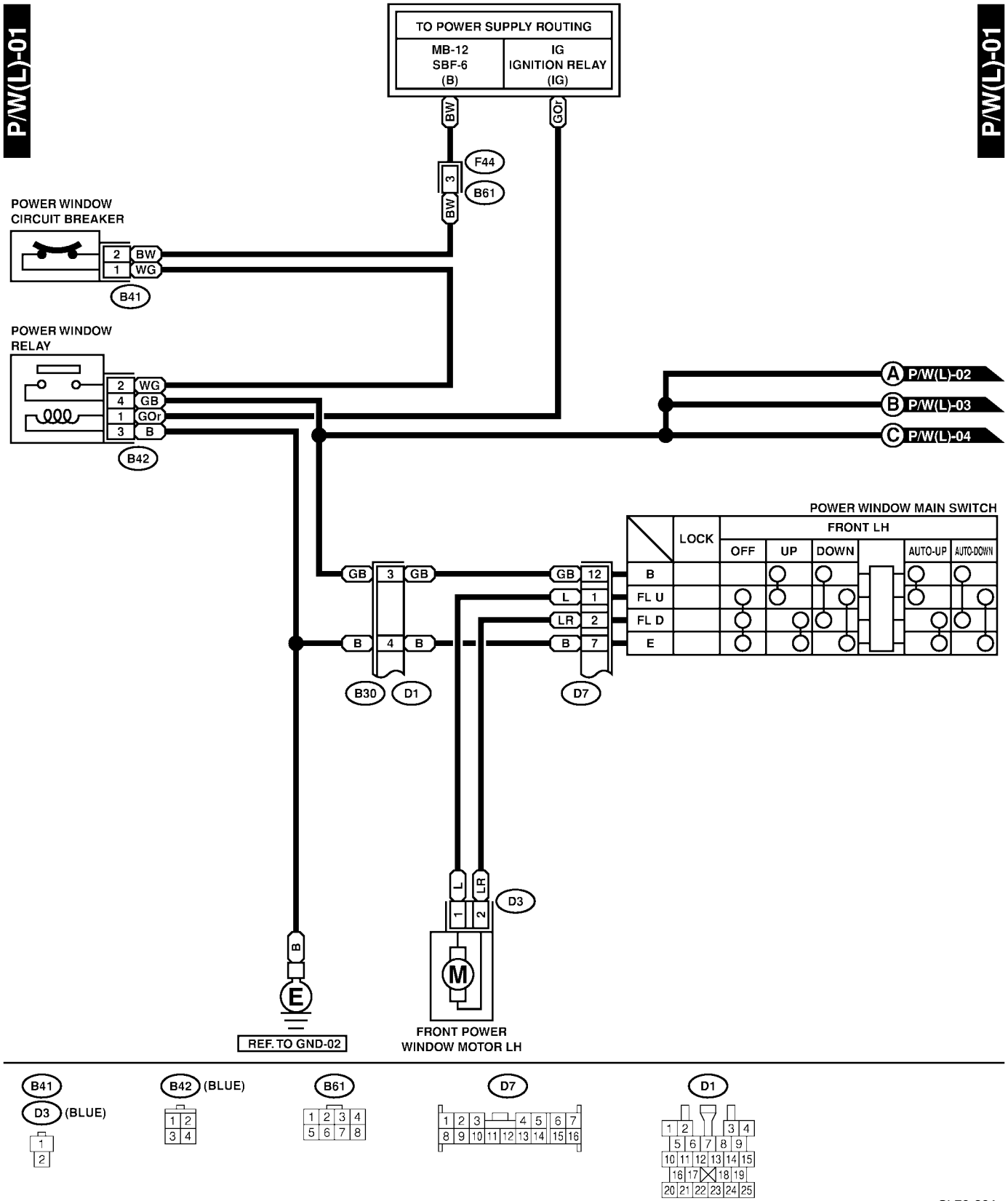

SL70-20A

P/W(L)-02

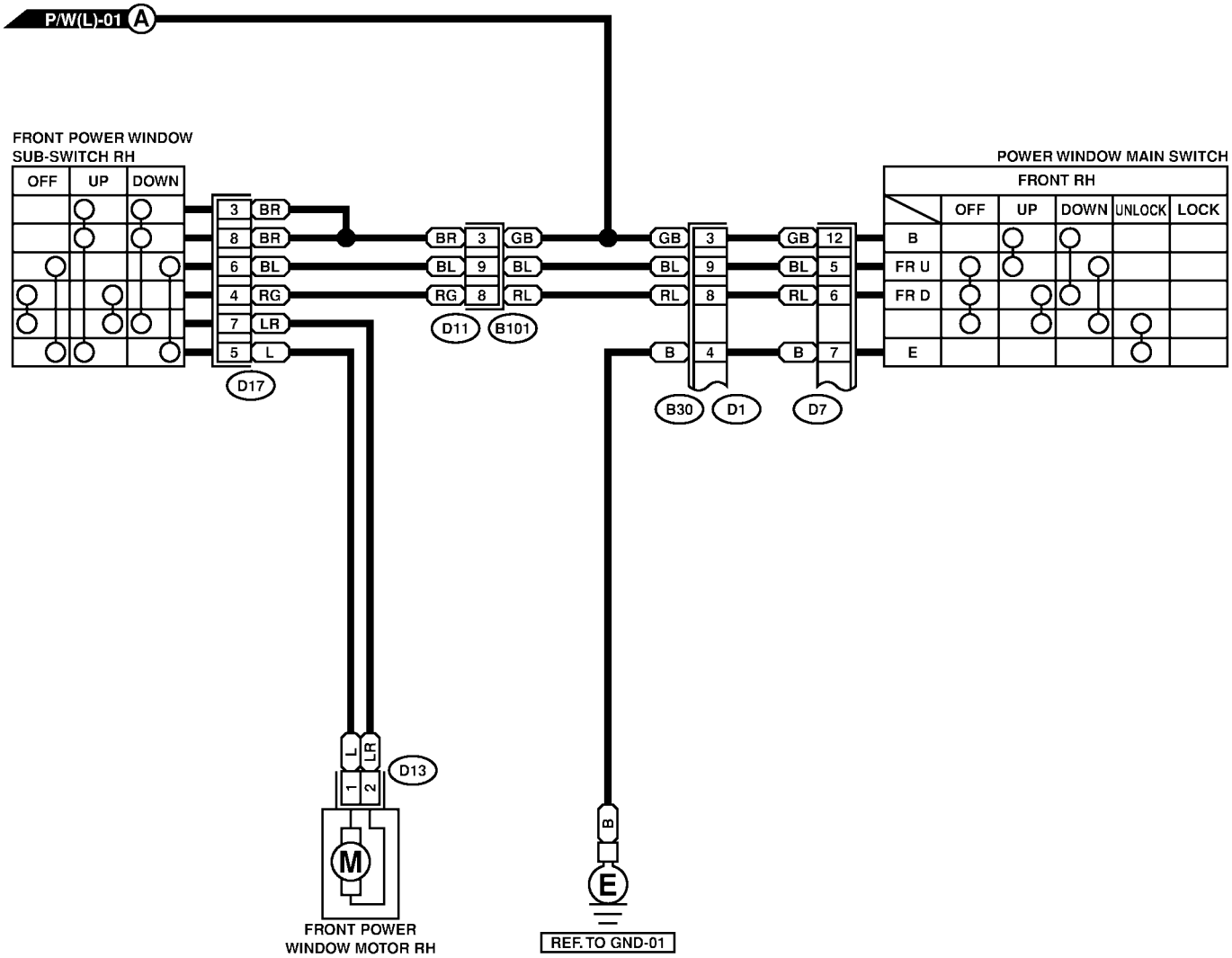

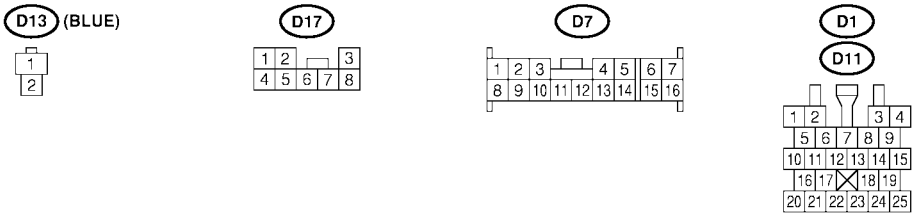

SL70-20B

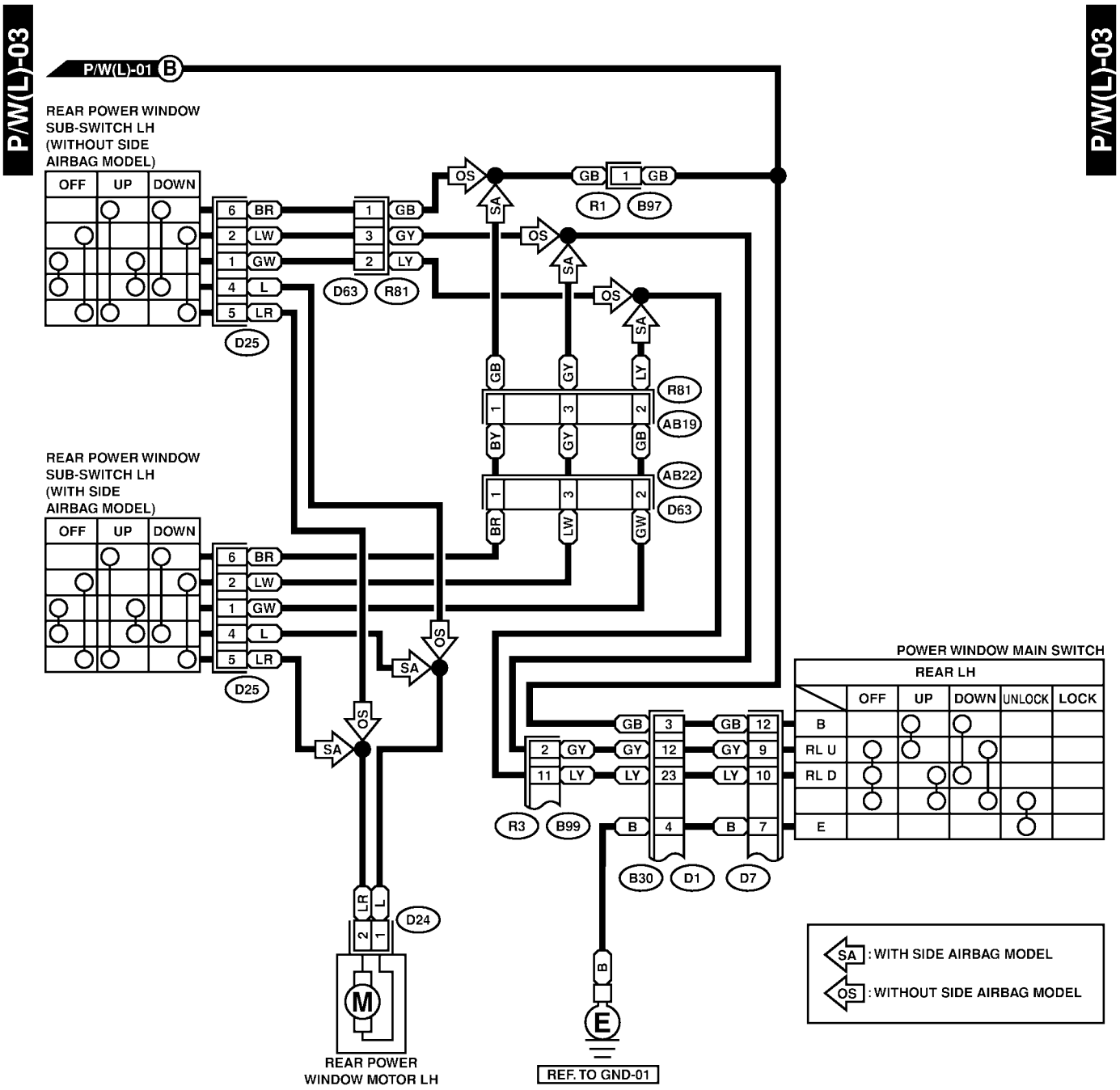
P/W(L)-03
P/W(L)-03
P/W(L)-01 B
REAR POWER WINDOW SUB-SWITCH LH (WITHOUT SIDE AIRBAG MODEL)
OFF
UP
DOWN
6 BR
2 LW
1 GW
4 L
5 LR
D25
GB
GY
LY
R1
B97
D63
R81
OS
SA
BY
AB19
AB22
REAR POWER WINDOW SUB-SWITCH LH (WITH SIDE AIRBAG MODEL)
POWER WINDOW MAIN SWITCH
REAR LH
OFF
UP
DOWN
UNLOCK
LOCK
B
RL U
RL D
E
R3
B99
B30
D1
D7
D24
M
REAR POWER WINDOW MOTOR LH
E
REF. TO GND-01
SA : WITH SIDE AIRBAG MODEL
OS : WITHOUT SIDE AIRBAG MODEL

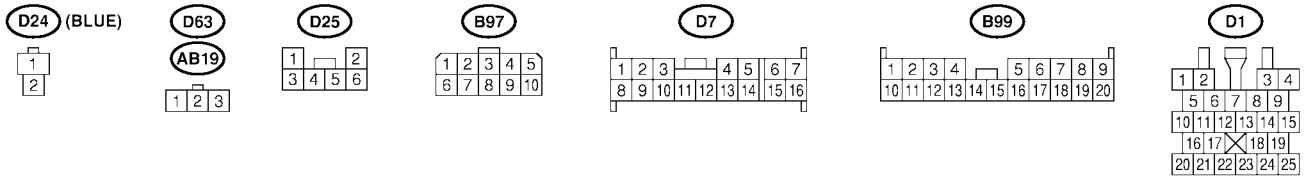
D24 (BLUE)
D63
AB19
D25
B97
D7
B99
D1

SL70-20C

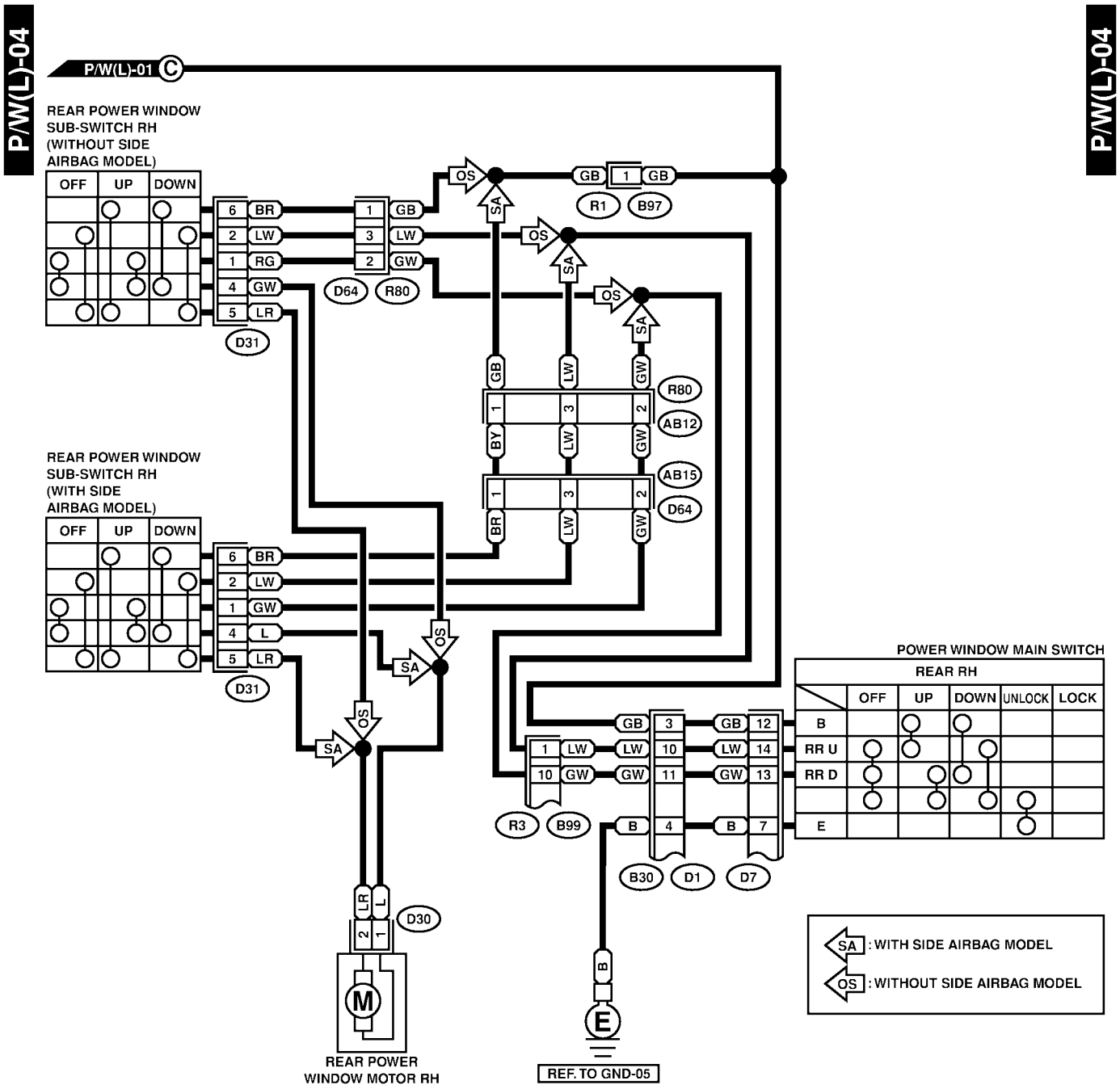
P/W(L)-04
P/W(L)-04
P/W(L)-01 C
REAR POWER WINDOW SUB-SWITCH RH (WITHOUT SIDE AIRBAG MODEL)
OFF UP DOWN
6 BR
2 LW
1 RG
4 GW
5 LR
D31
1 GB
3 LW
2 GW
D64 R80
GB 1 GB
R1 B97
OS
SA
R80
AB12
AB15
D64
BY
BR
REAR POWER WINDOW SUB-SWITCH RH (WITH SIDE AIRBAG MODEL)
OFF UP DOWN
6 BR
2 LW
1 GW
4 L
5 LR
D31
POWER WINDOW MAIN SWITCH
REAR RH
OFF UP DOWN UNLOCK LOCK
B
RR U
RR D
E
1 LW
10 GW
R3 B99
GB 3
LW 10
GW 11
B 4
B30 D1
GB 12
LW 14
GW 13
B 7
D7
LR
L
D30
M
REAR POWER WINDOW MOTOR RH
B
E
REF. TO GND-05
SA : WITH SIDE AIRBAG MODEL
OS : WITHOUT SIDE AIRBAG MODEL

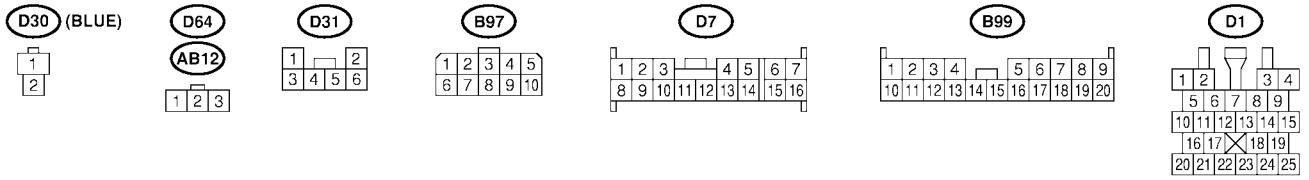
D30 (BLUE)
D64
AB12
D31
B97
D7
B99
D1

SL70-20D

2. RHD MODEL S903456A2102

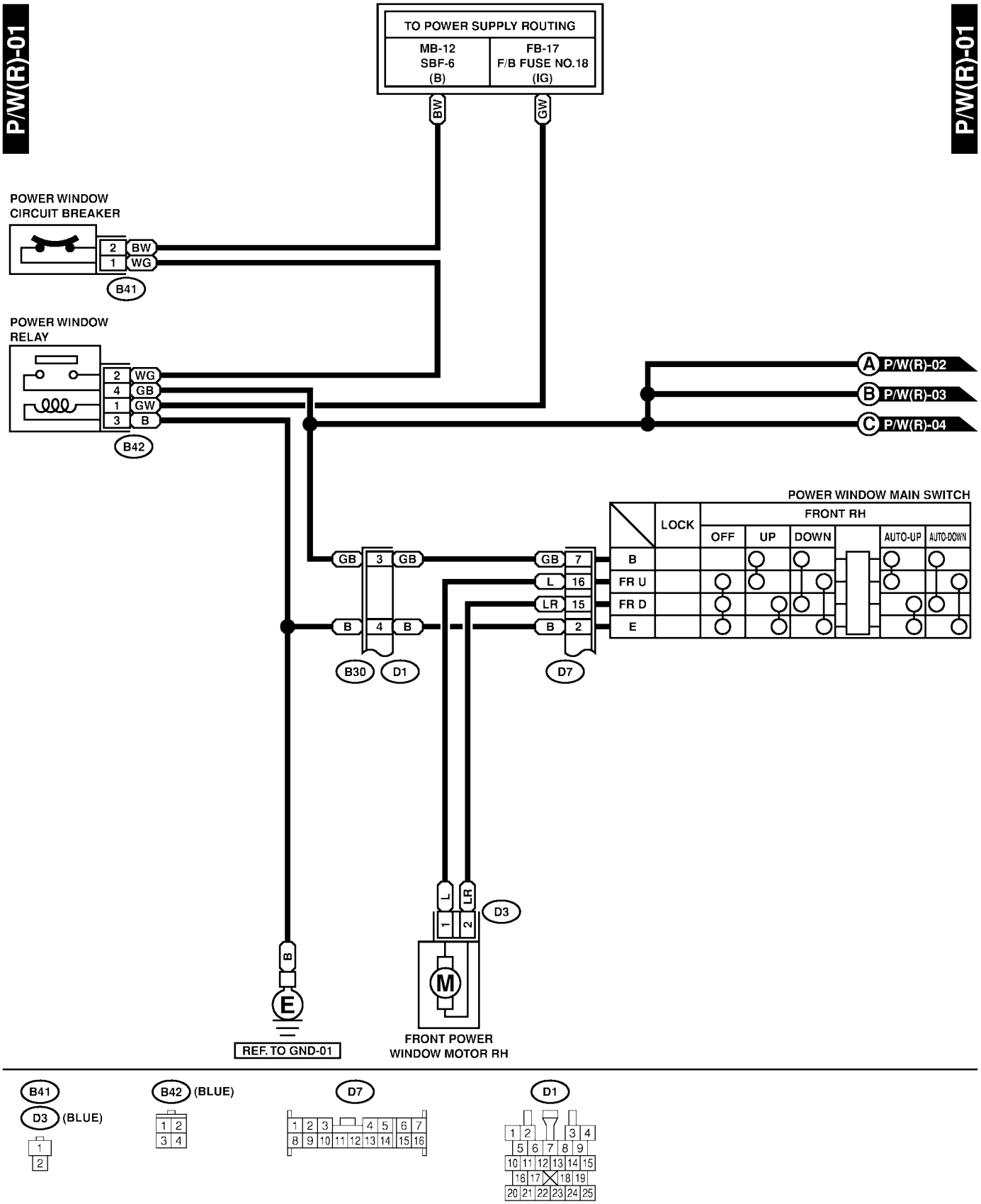

SR70-20A

P/W(R)-02

P/W(R)-02

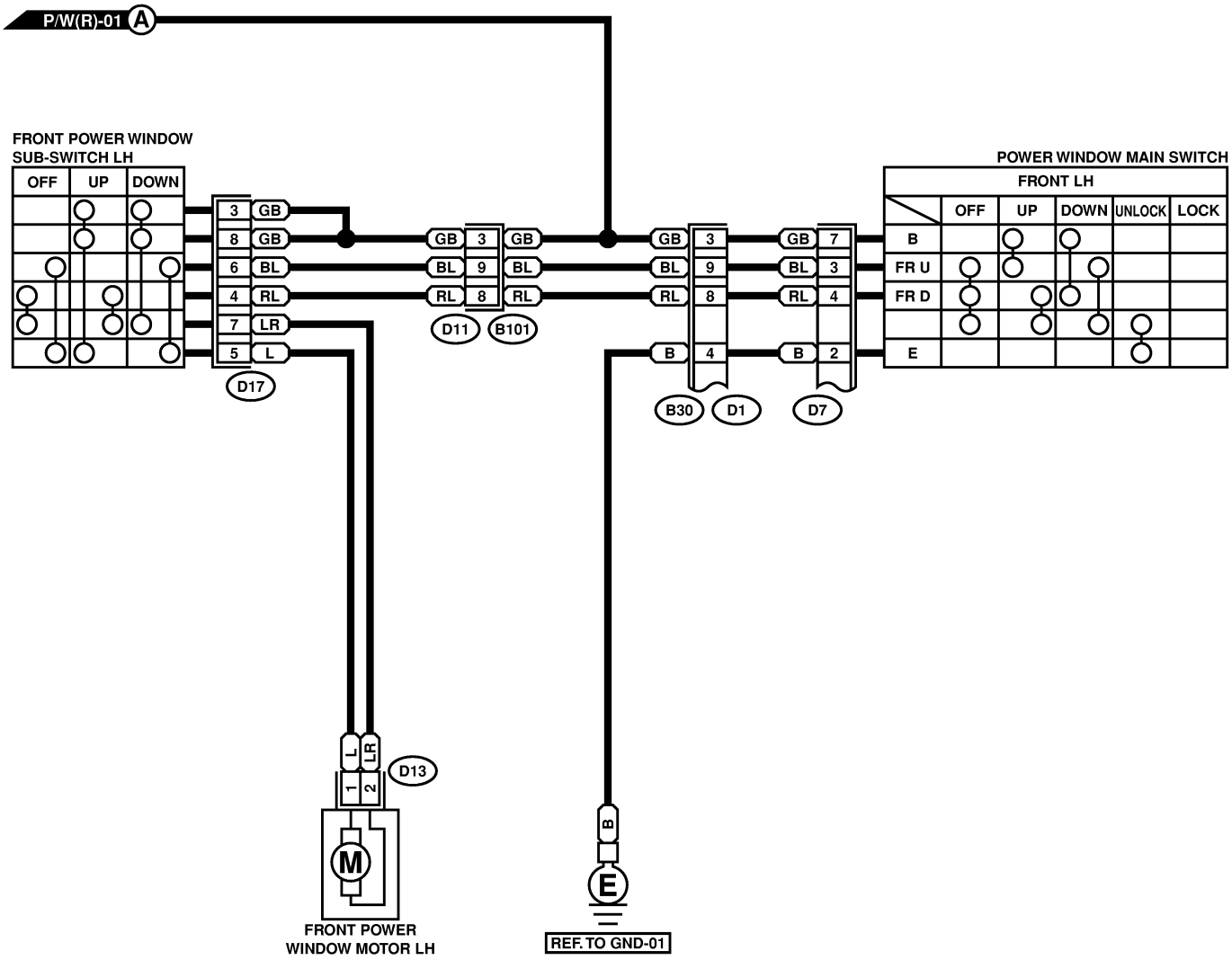

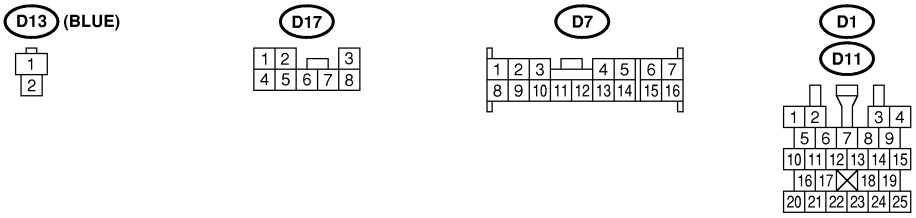

SR70-20B

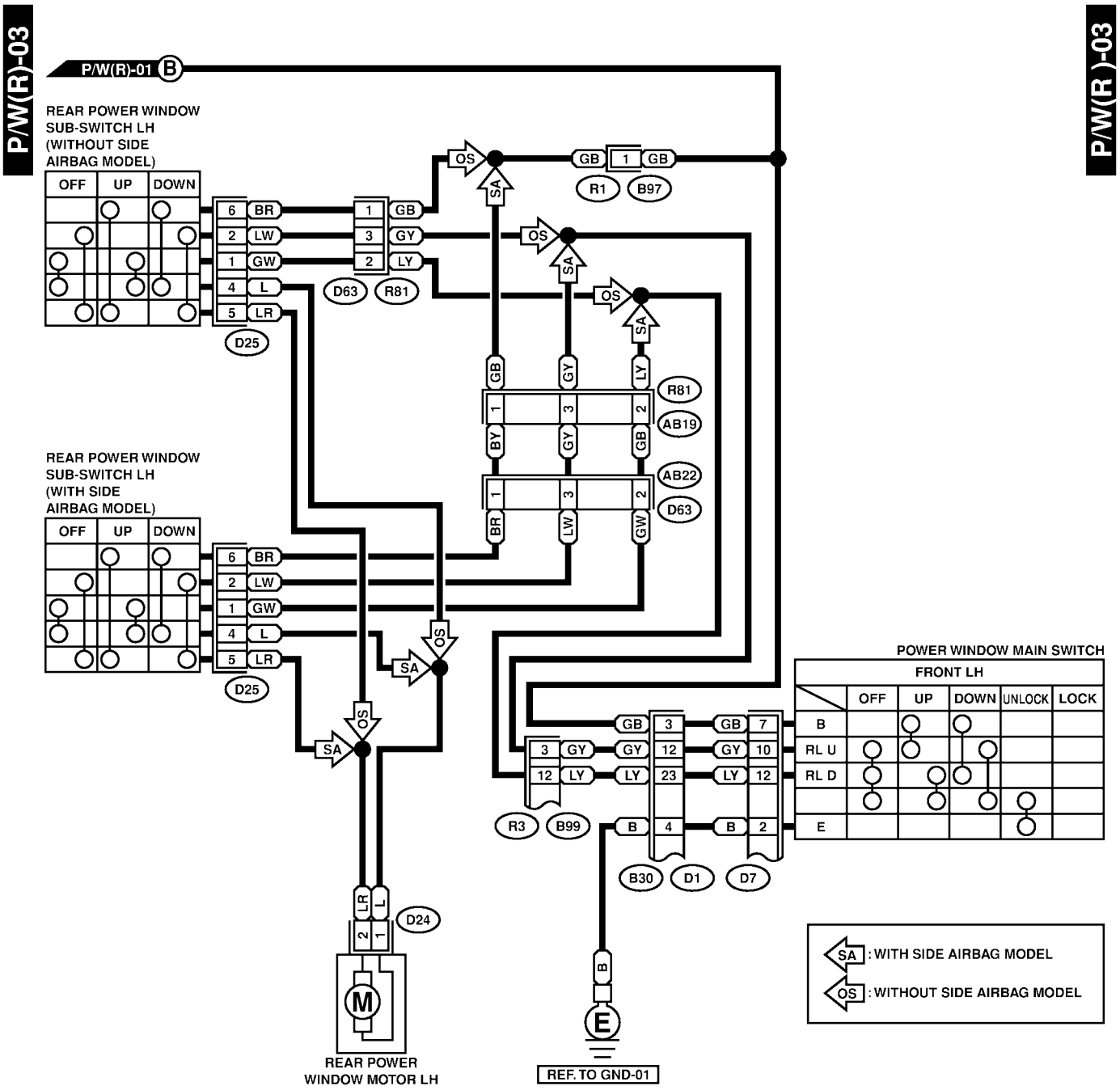
P/W(R)-03
P/W(R)-03
P/W(R)-01 B
REAR POWER WINDOW SUB-SWITCH LH (WITHOUT SIDE AIRBAG MODEL)
OFF UP DOWN
6 BR
2 LW
1 GW
4 L
5 LR
D25
GB 1 GB
R1 B97
1 GB
3 GY
2 LY
D63 R81
OS
SA
R81
AB19
AB22
D63
BY GY GB
BR LW GW
REAR POWER WINDOW SUB-SWITCH LH (WITH SIDE AIRBAG MODEL)
POWER WINDOW MAIN SWITCH
FRONT LH
OFF UP DOWN UNLOCK LOCK
B
RL U
RL D
E
3 GY 12 LY
R3 B99
GB 3 GY 12 LY 23 B 4
GB 7 GY 10 LY 12 B 2
B30 D1 D7
D24
LR L
M
REAR POWER WINDOW MOTOR LH
E
REF. TO GND-01
SA : WITH SIDE AIRBAG MODEL
OS : WITHOUT SIDE AIRBAG MODEL
D24 (BLUE)
D63
AB19
D25
B97
D7
B99 (BLUE)
D1

SR70-20C

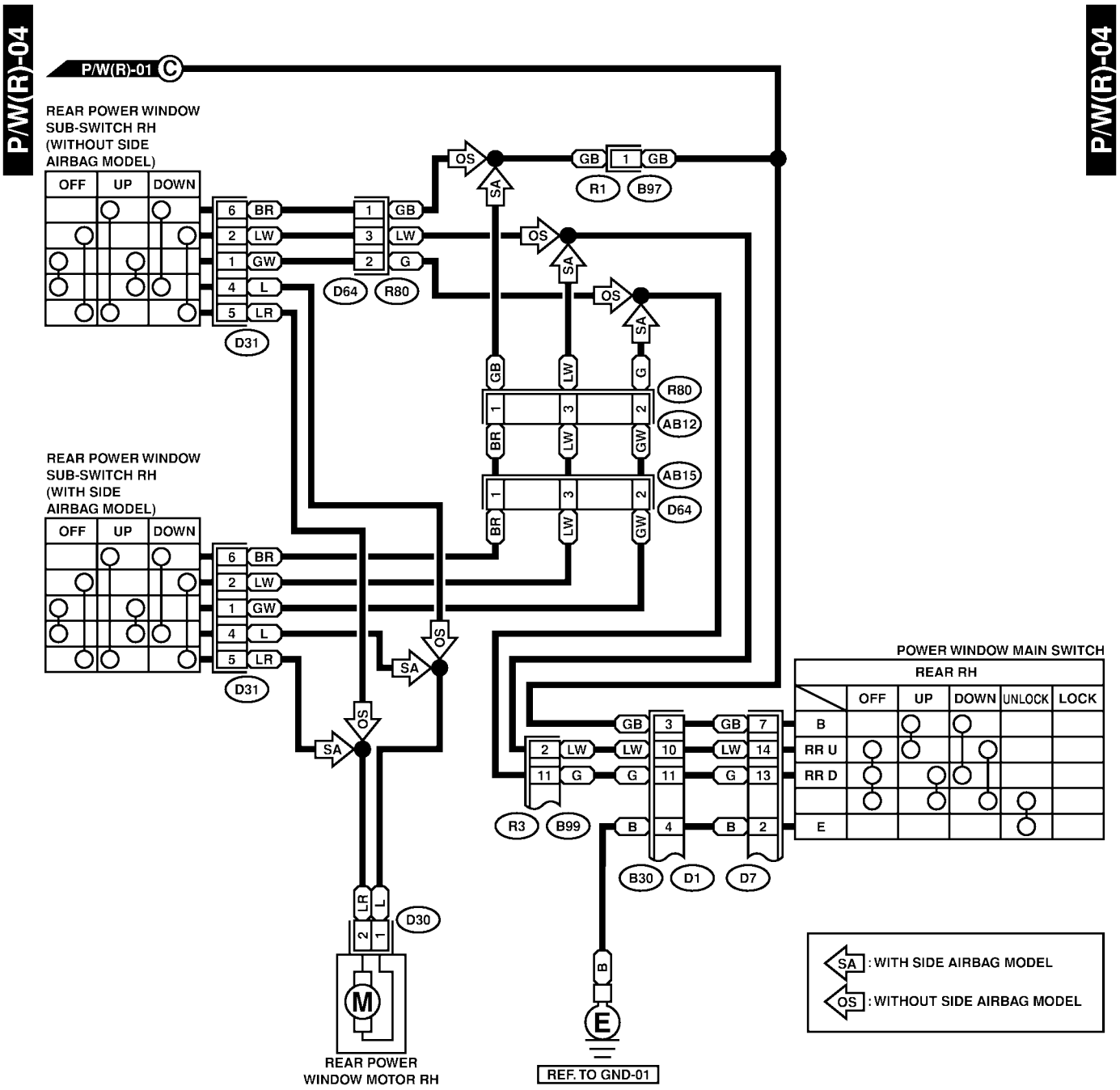
P/W(R)-04
P/W(R)-04
P/W(R)-01 C
REAR POWER WINDOW SUB-SWITCH RH (WITHOUT SIDE AIRBAG MODEL)
OFF UP DOWN
6 BR
2 LW
1 GW
4 L
5 LR
D31
1 GB
3 LW
2 G
D64 R80
OS
SA
GB 1 GB
R1 B97
GB LW G
R80
1 3 2
AB12
BR LW GW
AB15
D64
REAR POWER WINDOW SUB-SWITCH RH (WITH SIDE AIRBAG MODEL)
POWER WINDOW MAIN SWITCH
REAR RH
OFF UP DOWN UNLOCK LOCK
B
RR U
RR D
E
2 LW
11 G
R3 B99
GB 3
LW 10
G 11
B 4
B30 D1
GB 7
LW 14
G 13
B 2
D7
LR L
2 1
D30
M
REAR POWER WINDOW MOTOR RH
B
E
REF. TO GND-01
SA : WITH SIDE AIRBAG MODEL
OS : WITHOUT SIDE AIRBAG MODEL
D30 (BLUE)
D64
AB12
D31
B97
D7
B99 (BLUE)
D1

SR70-20D

32. Radiator Fan System S903480

A: SCHEMATIC S903480A21

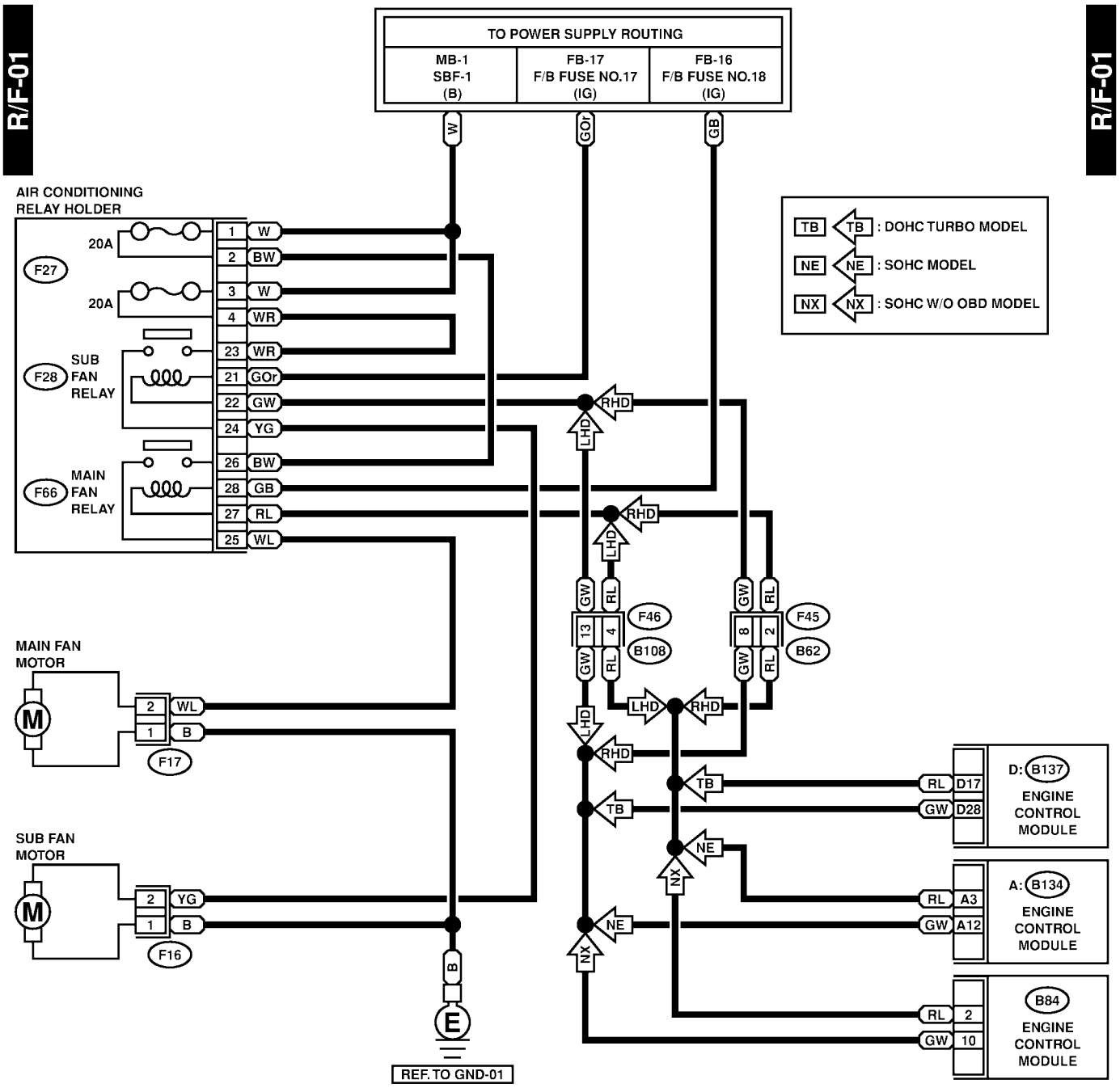

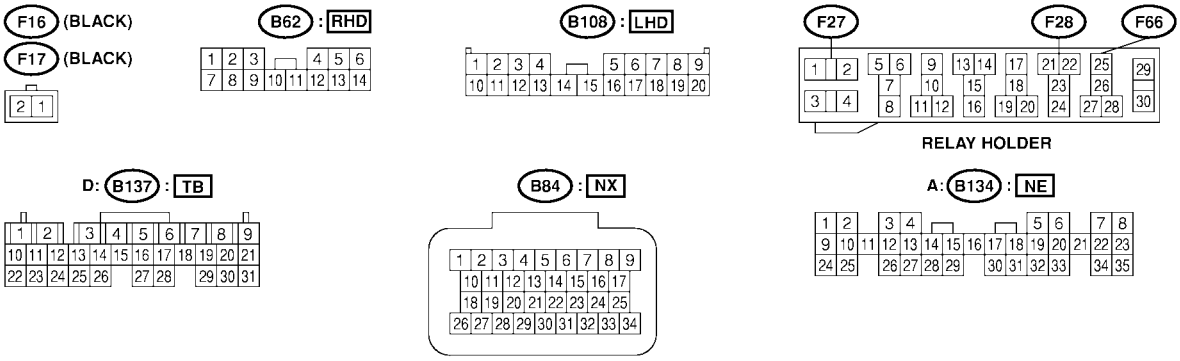

SG14-20

33. Rear Accessory Power Supply System S903670

A: SCHEMATIC S903670A21

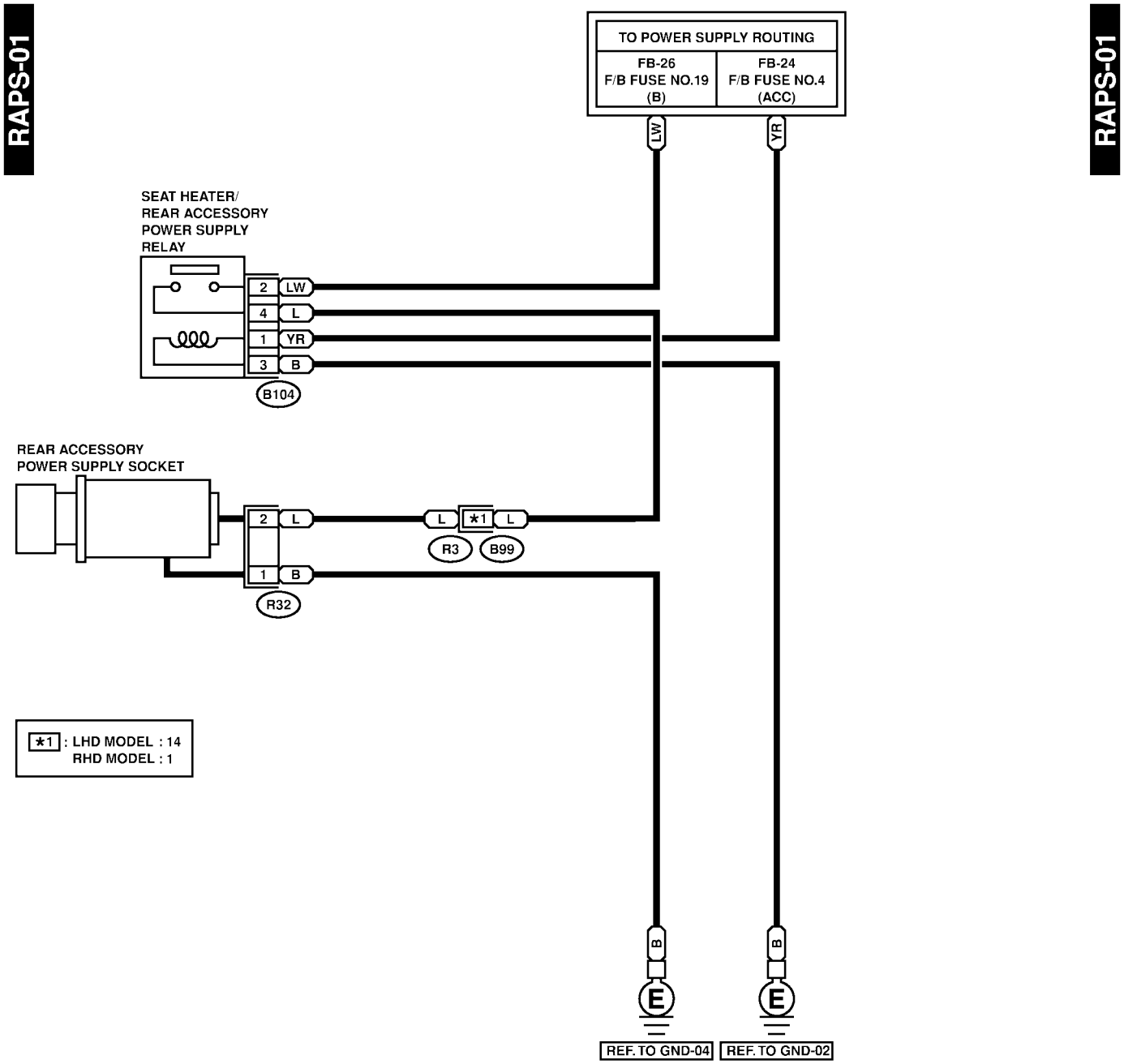

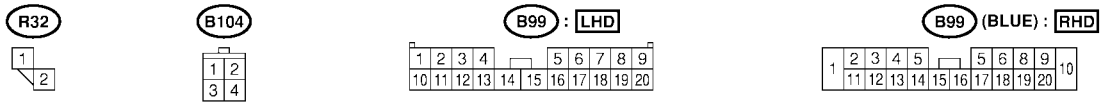

SG90-20

34. Rear Differential Oil Temperature Warning System S903747

A: SCHEMATIC S903747A21

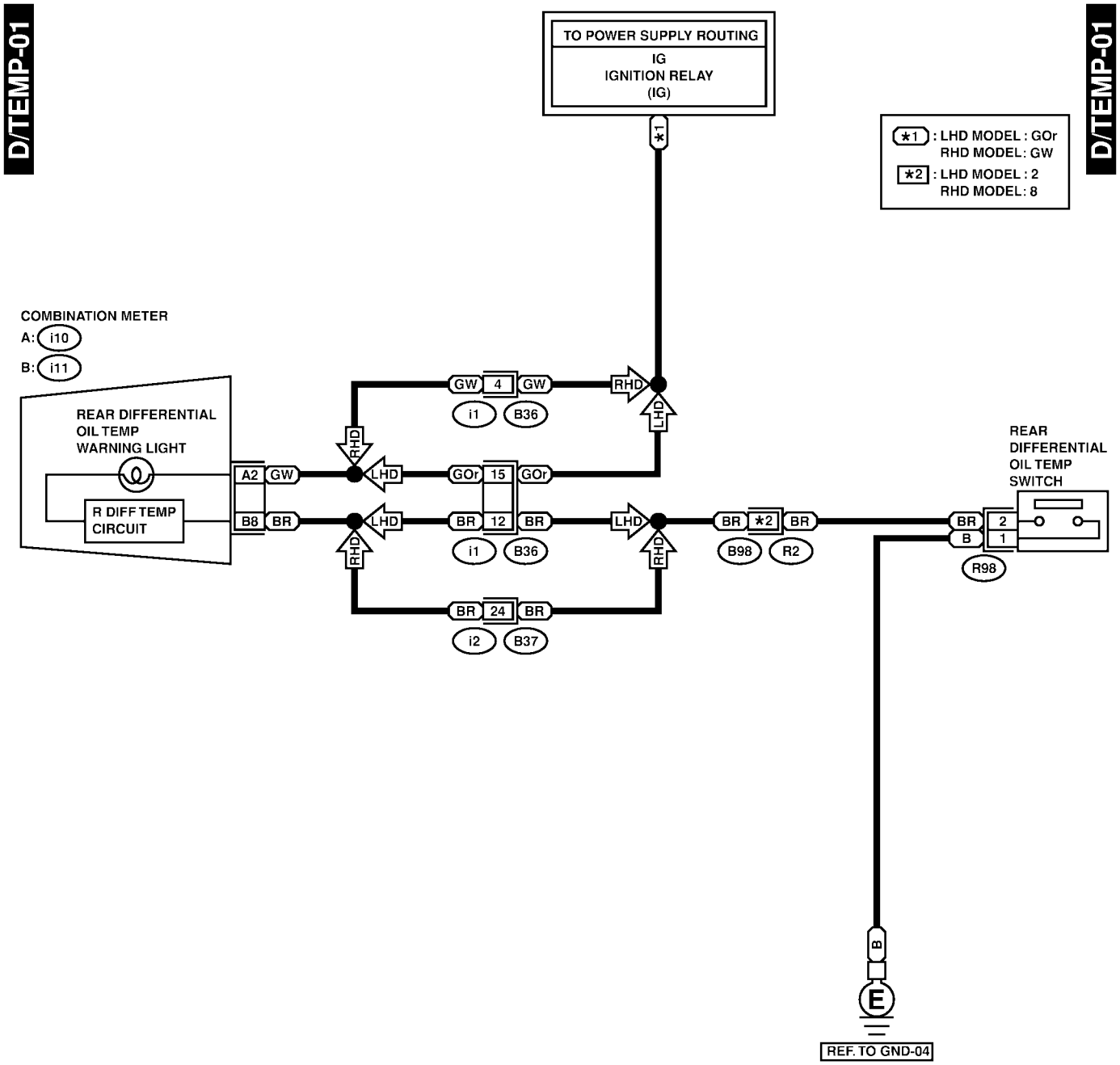

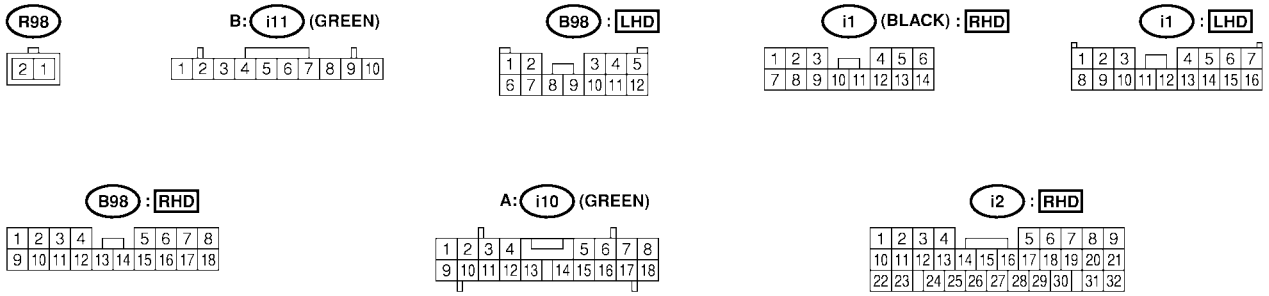

SG94-20

MEMO:

35. Rear Fog Light System S903476

A: SCHEMATIC S903476A21

1. LHD MODEL S903476A2101

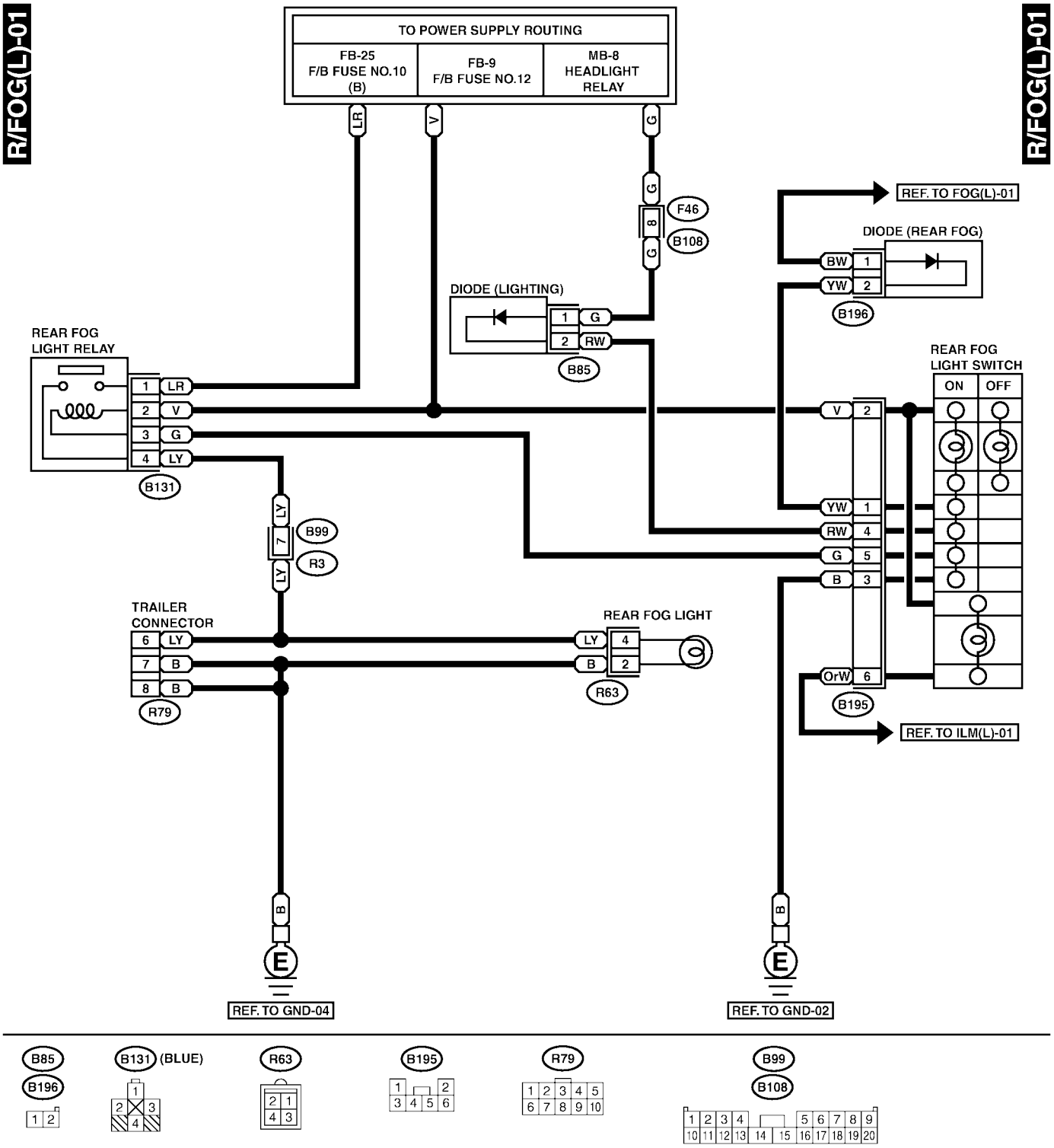

2. RHD MODEL S903476A2102

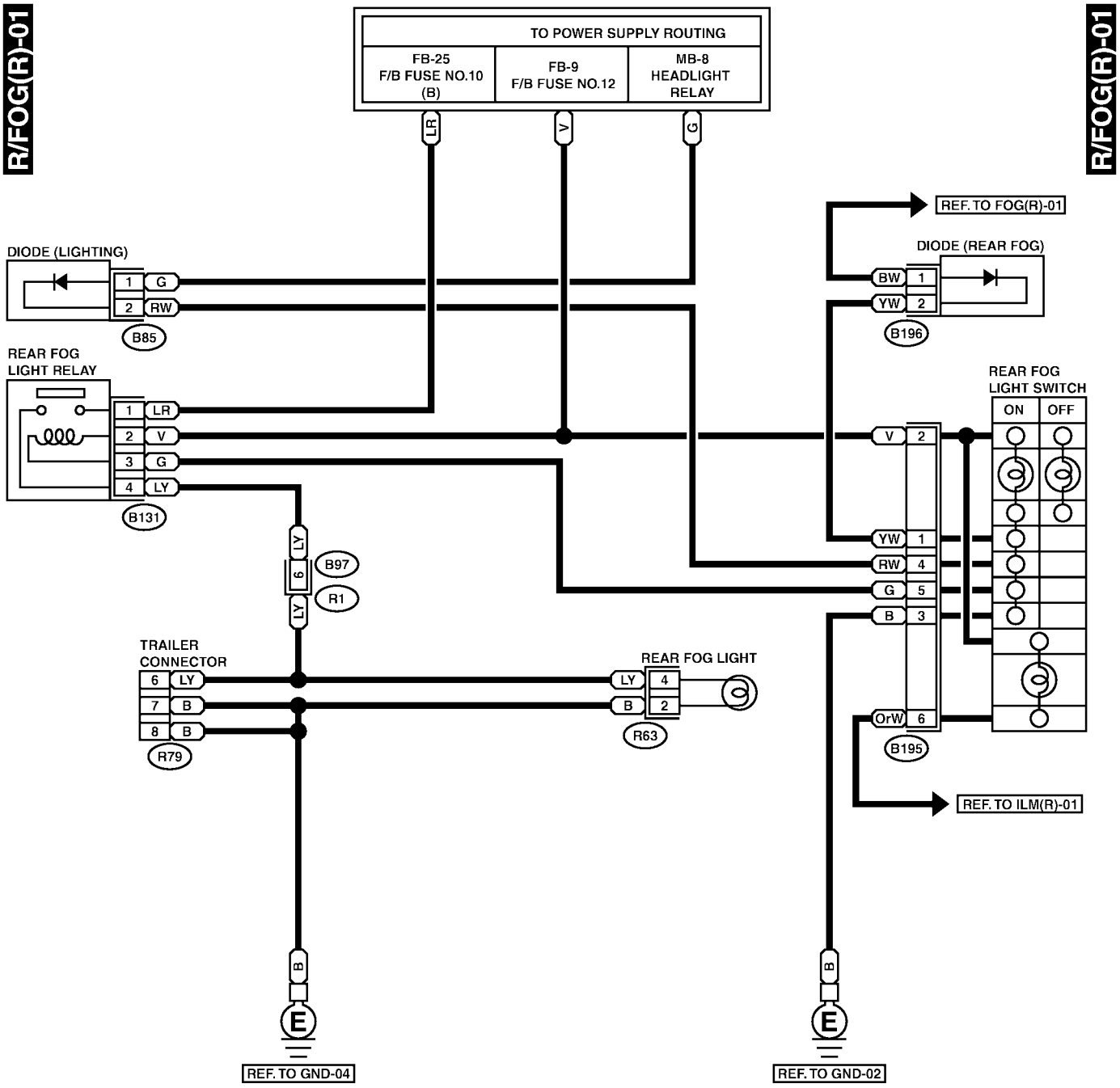

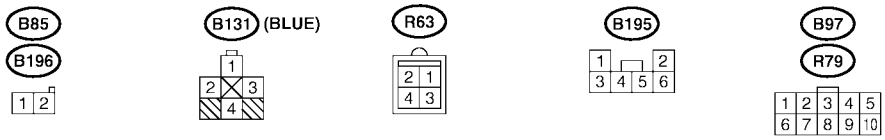

SR30-20

36. Rear Window Defogger System S903455

A: SCHEMATIC S903455A21

1. LHD MODEL S903455A2101

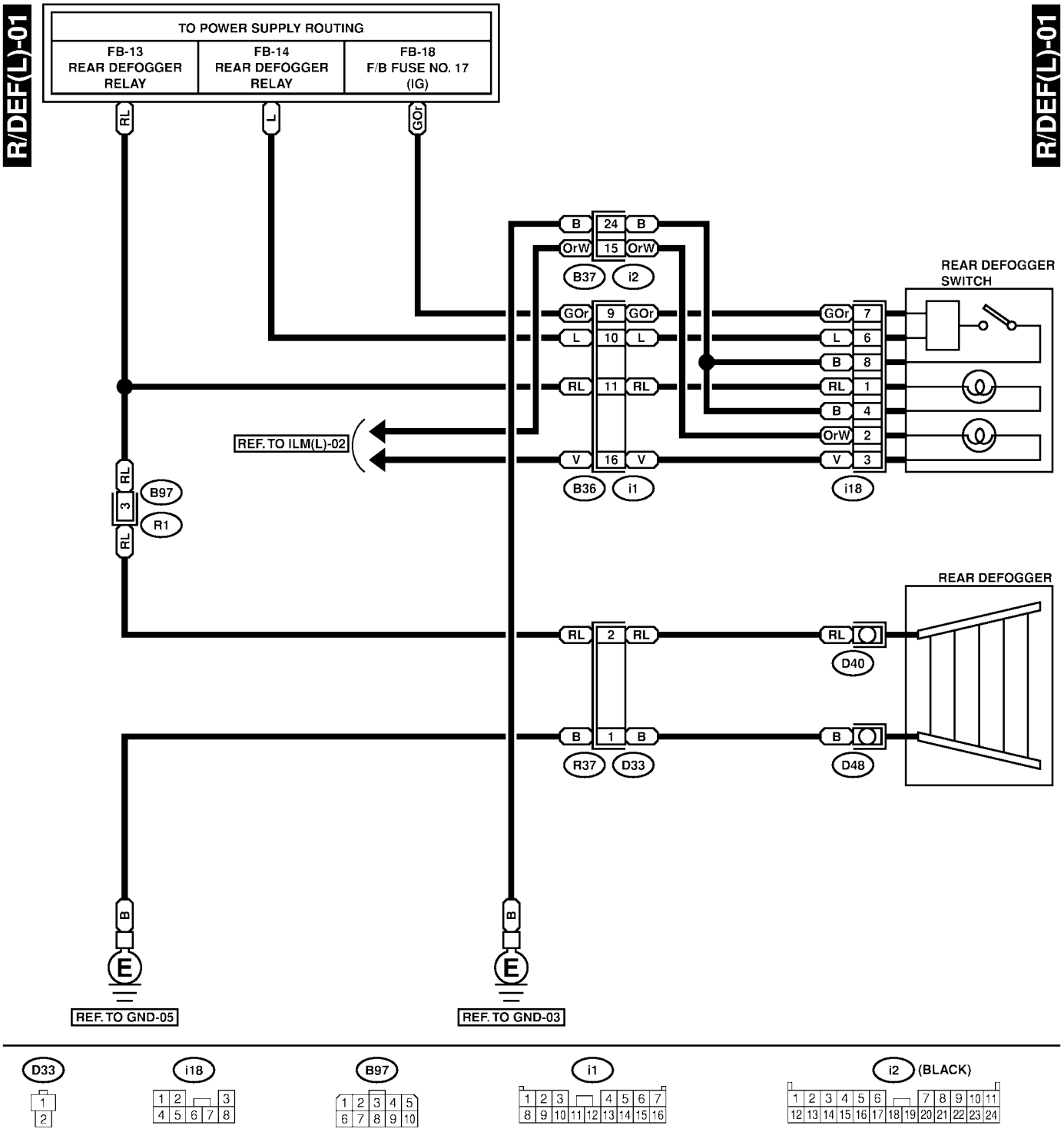

SL52-20

2. RHD MODEL S903455A2102

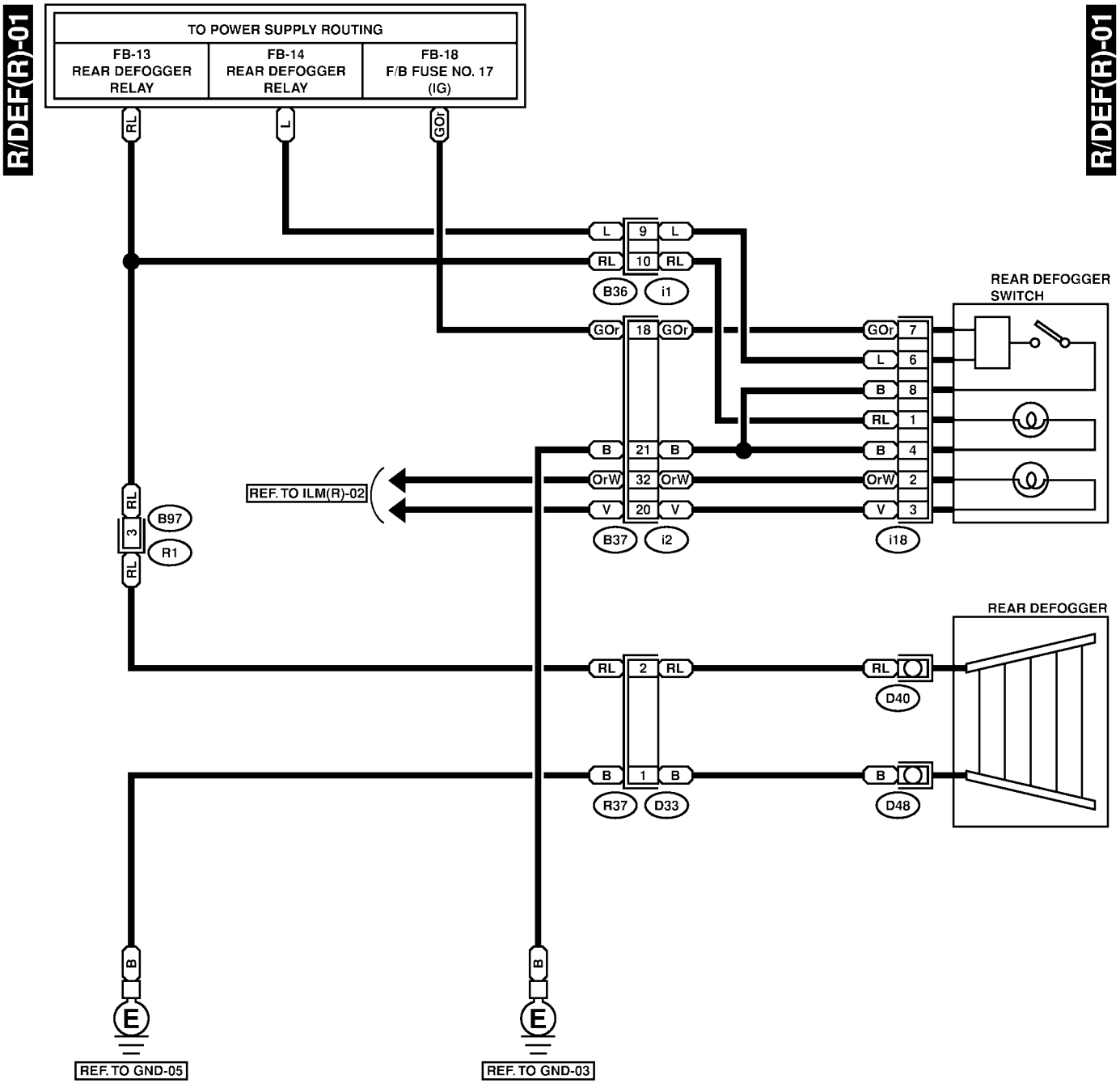

37. Remote Controlled Rearview Mirror System *S903459*

A: SCHEMATIC *S903459A21*

1. LHD MODEL S903459A2101

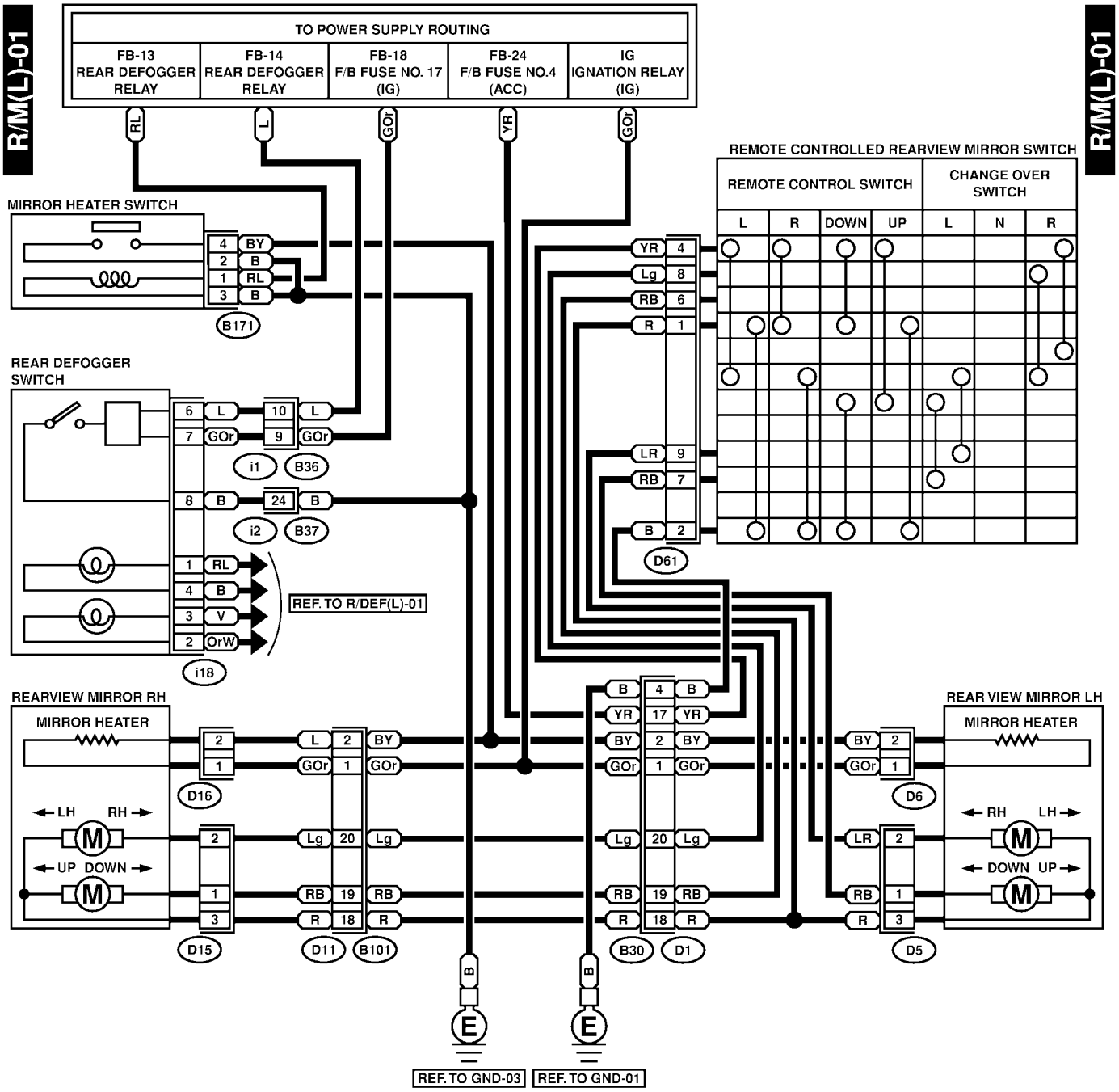

SL79-20

2. RHD MODEL S903459A2102

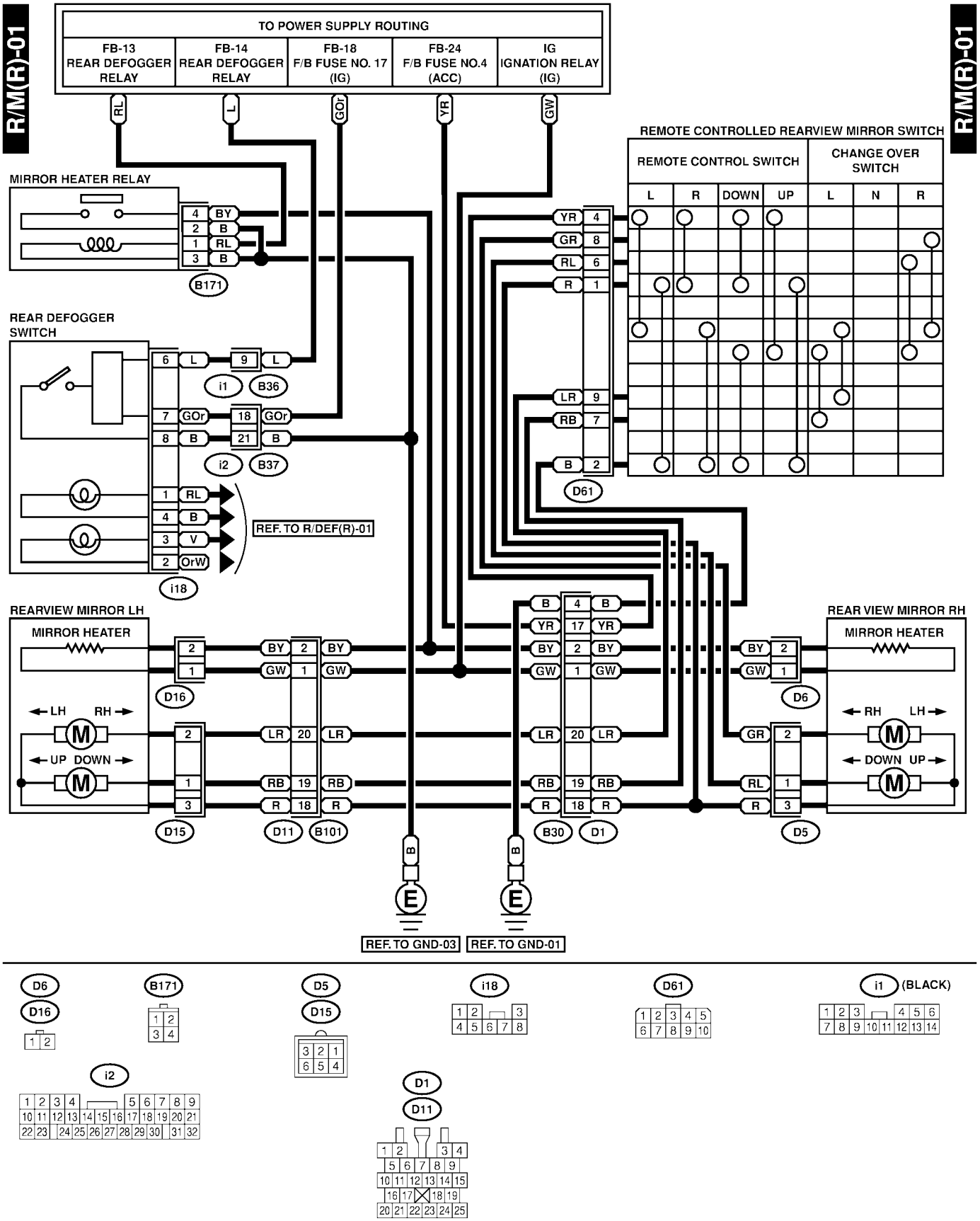

SR79-20

MEMO:

38. Seat Belt Warning System S903483

A: SCHEMATIC S903483A21

1. LHD MODEL S903483A2101

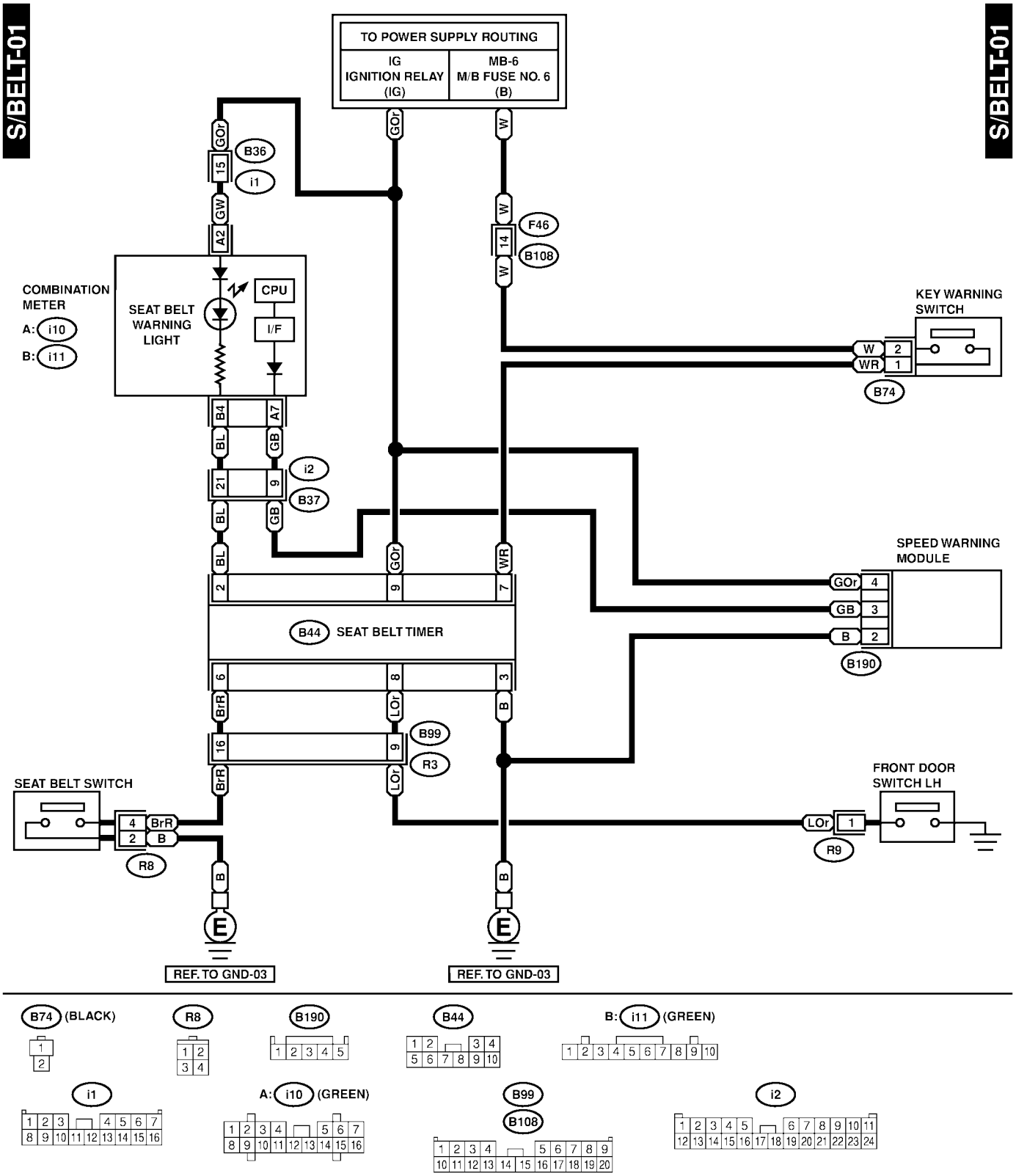

SL87-20

2. RHD MODEL S903483A2102

S/BELT-01

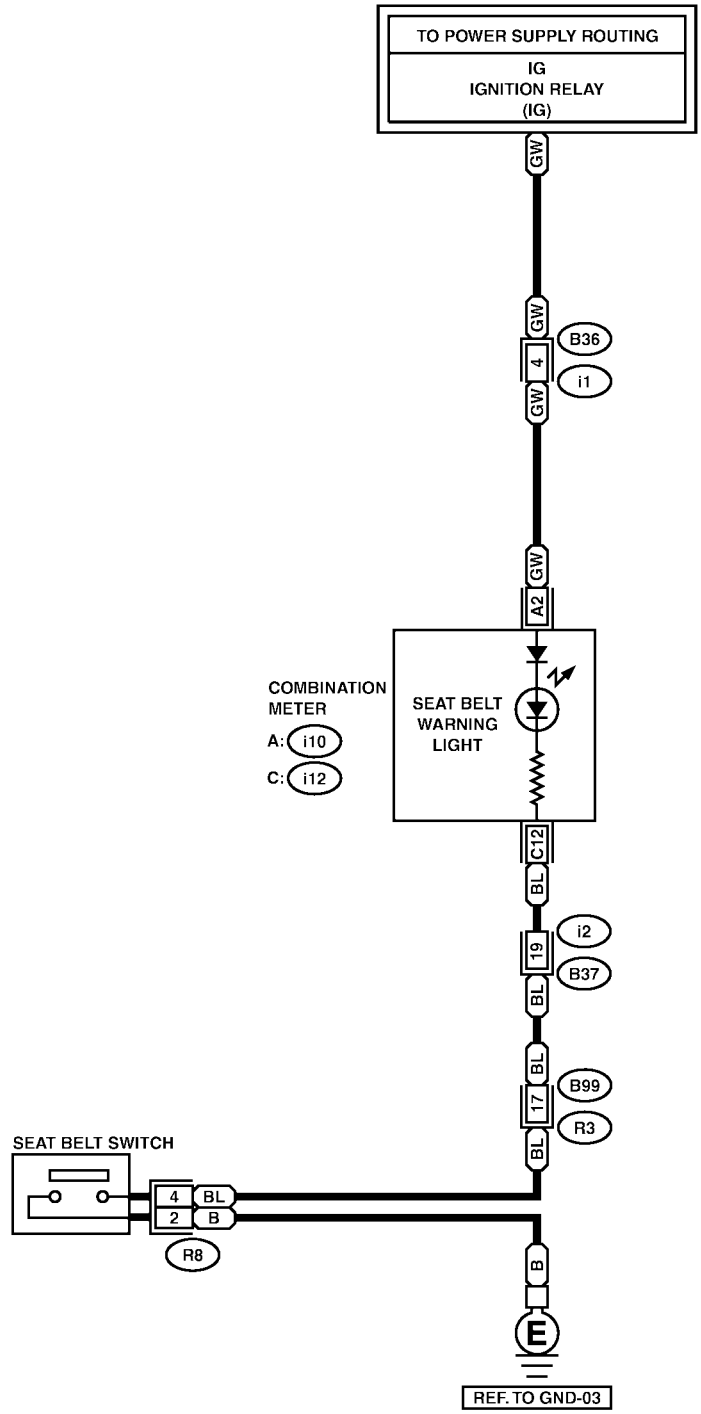

S/BELT-01

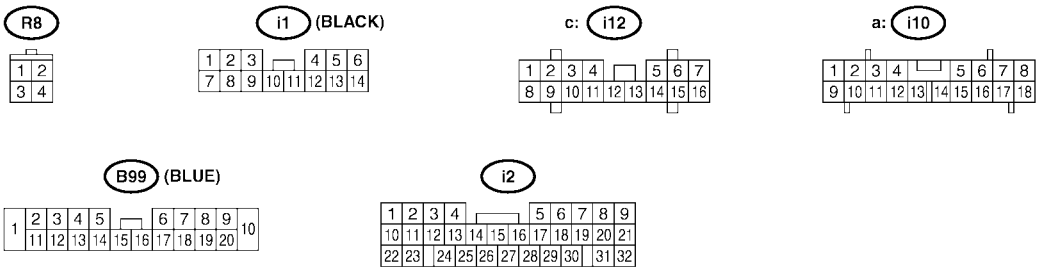

SR87-20

39. Seat Heater System S903462

A: SCHEMATIC S903462A21

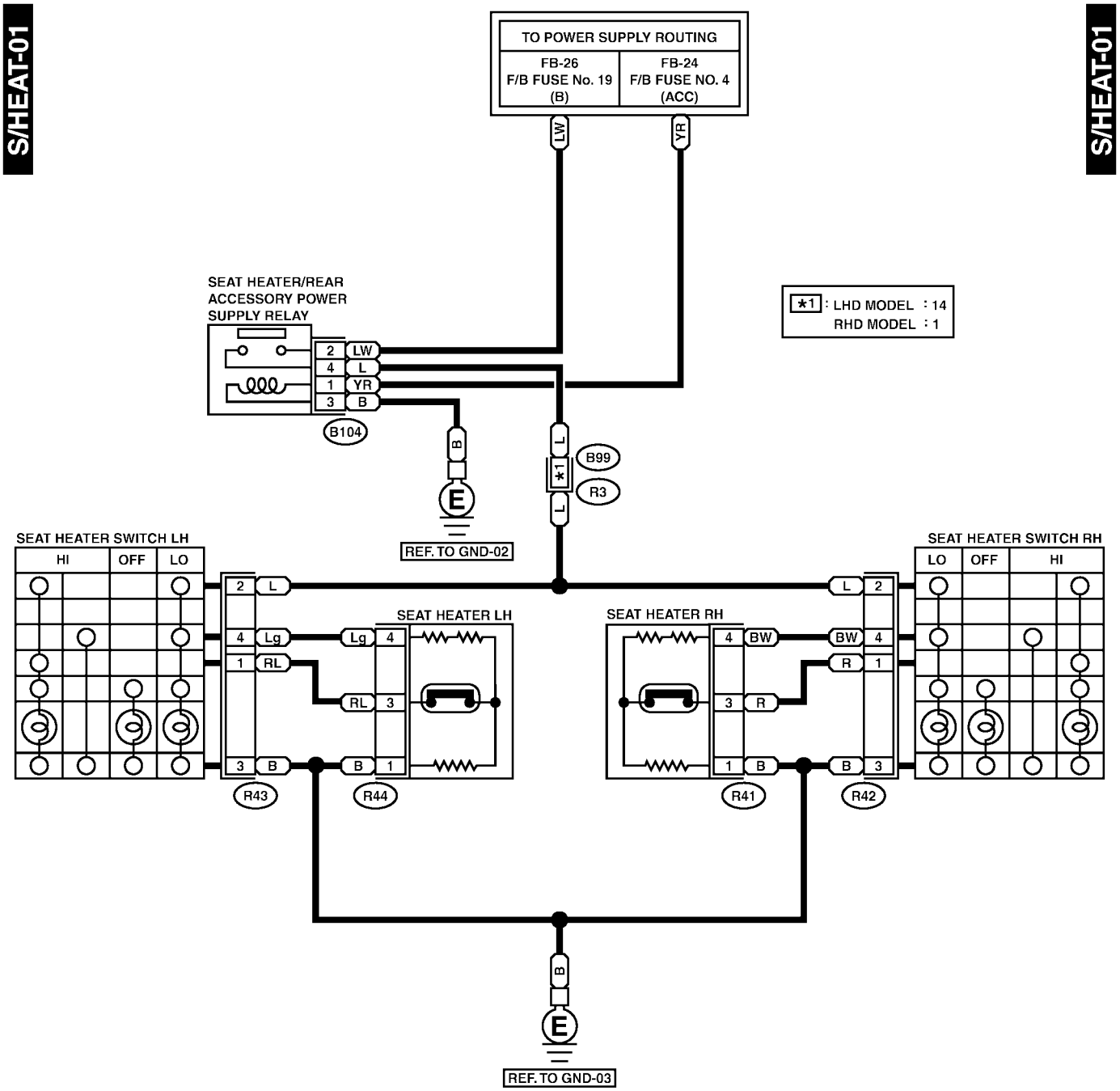

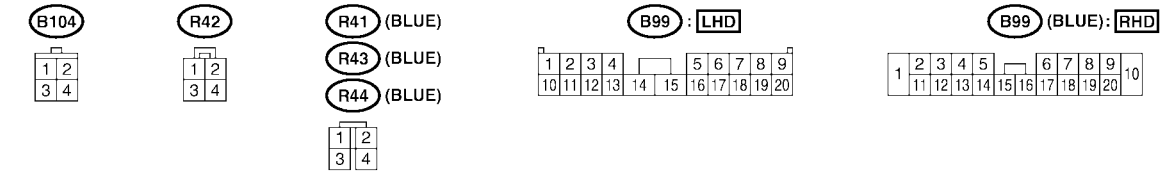

SG84-20

40. Starter System S903439

A: SCHEMATIC S903439A21

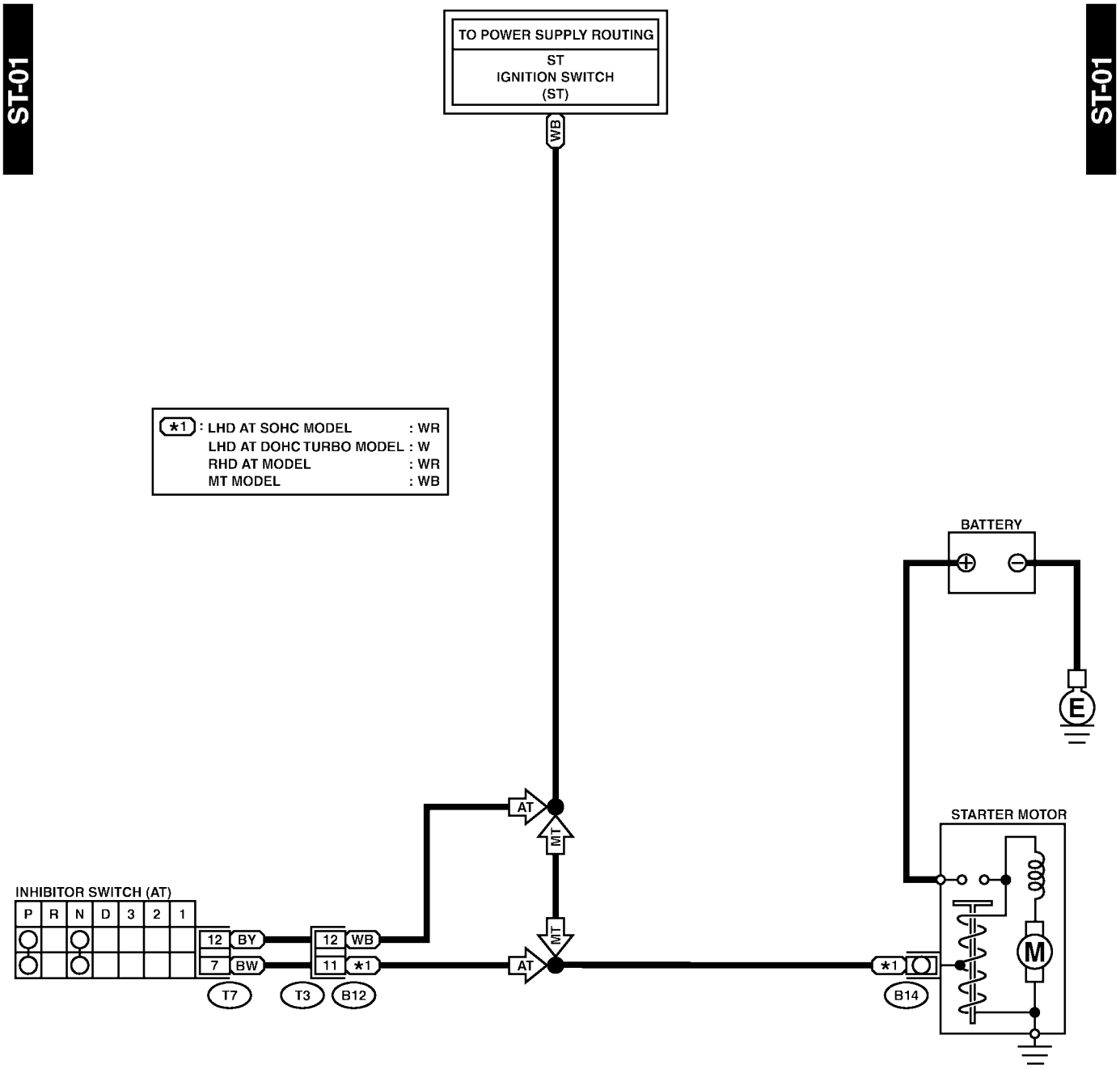

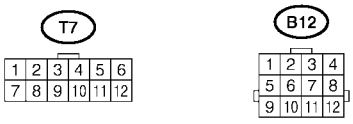

SG03-20

41. Stop Light System S903417

A: SCHEMATIC S903417A21

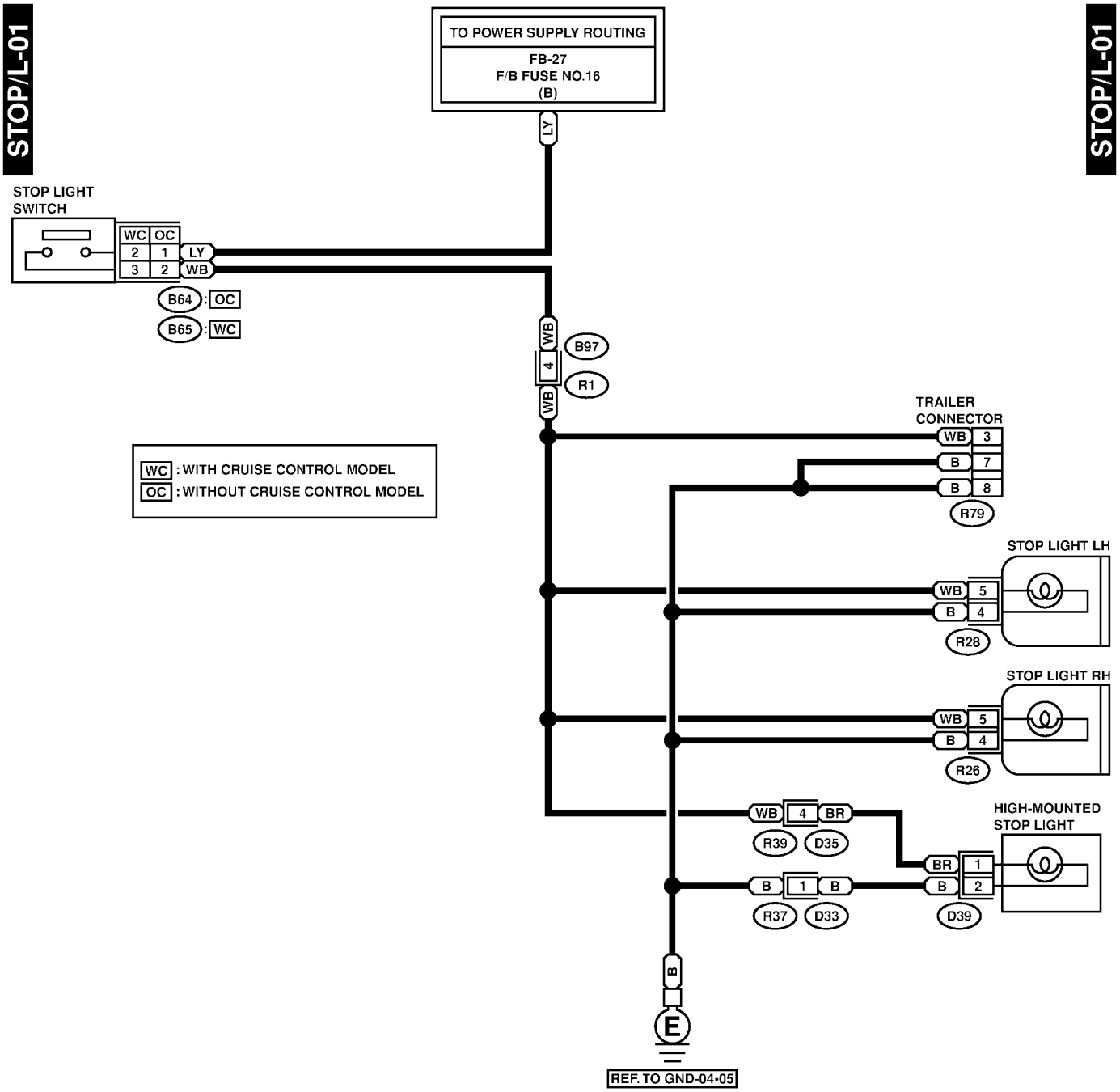

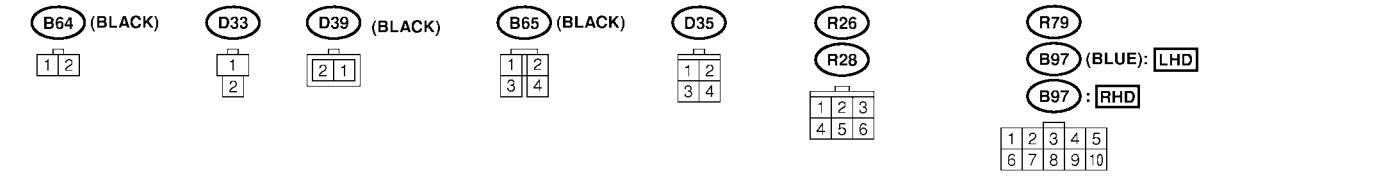

SG25-20